Hera
Saturn
Entry Probe
Mission

A Proposal in Response to the ESA Call for a Medium-size mission opportunity in ESA's Science Programme for launch in 2029-2030 (M5)

Olivier J. Mousis,
David H. Atkinson
and the Hera Team

October 5, 2016

Hera: Saturn Entry Probe Mission

Lead Proposer: Olivier J. Mousis (Aix Marseille Université, CNRS, Laboratoire d'Astrophysique de Marseille, UMR 7326, 13388, Marseille, France. Tel. +33 06 6085 3392, olivier.mousis@lam.fr)

The Lead Proposer will devote at least 20% of his time during the study phase.

Co-Proposer: David H. Atkinson (Jet Propulsion Laboratory, 4800 Oak Grove Drive, Pasadena, CA 91109, USA. Tel. +1 818 354 1053, David.H.Atkinson@jpl.nasa.gov)

European *Hera* Team Members: 32 members from 8 EU countries
M. Blanc (FR), B. Brugger (FR), S. Calcutt (UK), T. Cavalié (FR), S. Charnoz (FR), A. Coustenis (FR), M. Deleuil (FR), M. Dobrijevic (FR), F. Ferri (IT), L. Fletcher (UK), D. Gautier (FR), T. Guillot (FR), P. Hartogh (DE), A. Holland (UK), R. Hueso (ES), C. Keller (NL), E. Kessler (DE), J.-P. Lebreton (FR), M. Leese (UK), E. Lellouch (FR), D. Le Mignant (FR), P. Levacher (FR), B. Marty (FR), A. Morse (UK), J.-B. Renard (FR), A. Sánchez-Lavega (ES), F.-X. Schmider (FR), S. Sheridan (UK), F. Snik (NL), D. Stam (NL), P. Vernazza (FR), P. Wurz (CH)

US *Hera* Team Members: 13 members
M. Amato, S. Aslam, S. Atreya, S. Bolton, C. Nixon, G. S. Orton, K. Reh, K. Sayanagi, A. Simon, C. Sotin, T. Spilker, E. Venkatapathy, J. H. Waite

Hera website: http://hera.lam.fr

This proposal received support from Airbus Defence and Space, and SAFRAN Group.

Table of Contents **Page #**

Cover image of the Hera probe courtesy Dr. Tibor Balint

A. EXECUTIVE SUMMARY

The *Hera* Saturn entry probe mission is proposed as an ESA M-class mission to be piggybacked on a NASA spacecraft sent to or past the Saturn system. Hera consists of an atmospheric probe built by ESA and released into the atmosphere of Saturn by its NASA companion Saturn Carrier-Relay spacecraft. *Hera* will perform *in situ* measurements of the chemical and isotopic composition as well as the structure and dynamics of Saturn's atmosphere using a single probe, with the goal of improving our understanding of the origin, formation, and evolution of Saturn, the giant planets and their satellite systems, with extrapolation to extrasolar planets. *Hera* will probe well into and possibly beneath the cloud-forming region of the troposphere, below the region accessible to remote sensing, to locations where certain cosmogenically abundant species are expected to be well mixed.

The formation and evolution of the giant planets hold many keys to understanding the formation and evolution of the solar system as a whole, including the terrestrial planets, as well as exoplanetary systems. Key giant planet measurements include the composition and processes within their atmospheres, gravitational fields, magnetospheres, and systems of moons. The *Galileo* probe provided *in situ* measurements of the bulk chemical and isotopic composition of Jupiter's atmosphere. In particular and of special importance, the Jovian helium abundance was determined with a high accuracy. Moreover, the *Galileo* probe revealed unexpected enrichments of the noble gases Ar, Kr and Xe with respect to the solar abundances. Additionally, the *Galileo* probe mass spectrometer measured the $^{14}N/^{15}N$ ratio, which strongly suggests that the nitrogen in Jupiter's atmosphere was acquired from the protosolar nebula. The *Galileo* probe and orbiter mission to Jupiter, complemented by the *Juno* mission currently in orbit at Jupiter and the L-class *JUICE* mission selected by ESA, will provide a solid understanding of the Jupiter system. The *Cassini* orbiter is providing high quality observations of Saturn's atmosphere, system of moons, gravitational field, and magnetosphere. However, the Huygens probe descended to the surface of Titan, and Saturn's atmosphere bulk composition and deep structure therefore remain unexplored.

Measurement of the bulk composition of Saturn's atmosphere and the structure and dynamical processes within Saturn's atmosphere are the key missing elements needed to develop a system understanding of Saturn similar to Jupiter, as well as to offer an improved context for understanding the results of the *Galileo, Juno,* and *JUICE* exploration of Jupiter.

The *Hera* probe will use mass spectrometry to measure the abundances of hydrogen, helium, neon, argon, krypton, xenon, carbon, nitrogen, sulfur, and many of their compounds at near-equatorial latitudes to at least 10 bars. During its descent, *Hera* will also sample the isotopic ratios D/H, $^{3}He/^{4}He$, $^{20}Ne/^{21}Ne/^{22}Ne$, $^{36}Ar/^{38}Ar$, $^{12}C/^{13}C$, $^{14}N/^{15}N$, $^{16}O/^{17}O/^{18}O$, $^{82}Kr/^{83}Kr/^{84}Kr/^{86}Kr$, and $^{129}Xe/^{130}Xe/^{132}Xe/^{134}Xe/^{136}Xe$. *In situ* measurements of Saturn's well-mixed atmospheric gases will provide a vital comparison to the *Galileo* probe measurements at Jupiter, and a crucial "ground truth" for the *remote sensing* investigations by the *Cassini* orbiter. *Hera* will investigate Saturn's atmospheric dynamics along its descent trajectory, from (1) the vertical distribution of the pressure, temperature, clouds and wind speeds, and (2) deep wind speeds, differential rotation and convection, by combining probe, gravity and radiometric measurements. This is the next logical step in our exploration of the gas giants beyond the *Galileo* and *Cassini* missions.

The *in situ* scientific program of the *Hera* mission will be supported by an extensive observing campaign with Earth-based ground and space telescopes.

Hera will improve our understanding of the physical processes responsible for the formation of giant planets (contribution of the local solar nebula, accretion of icy planetesimals, and nature and formation temperature of the latter), and will shed light on the composition of giant planet precursors and the dynamical evolution of the early solar system. *Hera* will also address the question as to why Jupiter and Saturn are so different in size, density and core dimension by investigating different pathways to planetary formation. *Hera* will thus provide new insights on the mechanisms that led to the stunning diversity of giant planets in our solar system and in exoplanetary solar systems.

The *Hera* probe will be designed from ESA elements with possible contributions from NASA, and the Saturn/Carrier-Relay Spacecraft will be supplied by NASA through its selection via the New Frontier 2016 call or in the form of a flagship

mission selected by the NASA "Roadmaps to Ocean Worlds" (ROW) program. The Hera probe will be powered by batteries, and we therefore anticipate only one major subsystems to be possibly supplied by the United States, either by direct procurement by ESA or by contribution from NASA: the thermal protection system of the probe.

Following the highly successful example of the *Cassini-Huygens* mission, *Hera* will carry European and American instruments, with scientists and engineers from both agencies and many affiliates participating in all aspects of mission development and implementation. A Saturn probe is one of the six identified desired themes by the Planetary Science Decadal Survey committee on the NASA New Frontier's list, providing additional indication that a Saturn probe is of extremely high interest and a very high priority for the international community.

The *Hera* Saturn probe mission will begin its flight phase as an element of a NASA Saturn mission (likely a NASA New Frontiers mission) launch to place both the NASA spacecraft, which functions also as the *Hera* probe's Carrier-Relay Spacecraft (CRSC), and the *Hera* probe on a transfer trajectory to Saturn. For study purposes the *Hera* team has used a very common and somewhat generic trajectory that utilizes Venus and Earth gravity assists, and arrives at Saturn in August 2033. The NASA *CRSC* releases the probe on a ballistic trajectory that will carry the probe into Saturn's atmosphere several weeks later. During the ~70-90 minute *Hera* descent, the overflying CRSC will maintain the data relay link with the descent module, storing multiple copies of each channel of the probe's science data in redundant onboard storage media for later downlink to Earth. After the data reception window ends the CRSC will turn its high gain antenna to Earth, downlink each the entire dataset multiple times, and then begin its NASA science mission.

Public interest in the Saturnian system continues to be strong, with much of the credit due to the extraordinarily successful *Cassini-Huygens* mission. Images of Saturn, its rings and moons are regularly featured in international media, and as NASA's "Astronomy Picture of the Day". Without doubt, continued exploration with a return to Saturn's system will amplify the general public's interest and excitement and appeal to (future) students at all levels. Education and Public Outreach activities will be a natural and important part of the *Hera* mission. Using the successful Cassini-Huygens Education and Public Outreach program as an example, a detailed communication and outreach plan adapted for future generations will be developed during the next phases of the mission.

In this proposal led by Dr. Olivier J. Mousis (Lead Proposer) and Dr. David H. Atkinson (Co-Proposer), the science case, the scientific requirements, and the technological readiness level of *Hera* are described first. Next, we describe the science payload comprising 5 instruments. The baseline mission configuration and profile are also detailed. Lastly, we discuss the management scheme and demonstrate that as proposed, the cost of the Hera probe mission safely falls within the M5 cost guidelines.

B. SCIENCE CASE

B.1 Context

The giant planets Jupiter, Saturn, Uranus and Neptune contain most of the mass and angular momentum of the Sun's planetary system, and played a significant role in shaping the system's large-scale architecture and evolution, as well as the properties of the smaller, inner worlds [*1*]. In particular, the formation of these planets affected the timing and efficiency of volatile delivery to the Earth and other terrestrial planets [*2*]. Understanding giant planet formation is therefore essential for understanding the origin and evolution of the Earth and other potentially habitable bodies within the solar system. Their origins and overall influence on the architecture of planetary systems, and the plethora of physical and chemical processes within their atmospheres, make the giant planets particularly important destinations for exploration.

Both Jupiter and Saturn are thought to have relatively small cores surrounded by massive envelopes composed primarily of hydrogen and helium, and are therefore called *gas giants*. Uranus and Neptune represent a separate class of planets known as the *ice giants*, because their density is consistent with the presence of a significant fraction of ices/rocks in their interiors. Despite the apparent grouping into two classes in the solar system, giant planets likely exist on a continuum, each carrying the characteristics of their respective formation environment. Comparative planetology of the Sun's four giants is therefore essential to reveal the formational, evolutionary, and potential migrational processes that occurred during the early ages of the protosolar nebula (hereafter PSN).

In this proposal, we describe the scientific goals of *Hera*, an entry probe mission to Saturn. *In situ* exploration of Saturn's atmosphere addresses two overarching themes that reach far beyond the unique knowledge gained about Saturn: (1) **the formation history of the solar system and, by extension, extrasolar planetary systems**, and (2) **the processes that affect the vertical profile of temperatures, clouds and gaseous composition in planetary atmospheres**. These two science themes are the primary objectives of the Science Traceability Matrix (STM) detailed in Table C.2. Examples of the latter include the vertical profile of atmospheric zonal winds, the generation and propagation of atmospheric waves, the formation and structure of clouds and hazes, and disequilibrium processes of photochemistry and vertical mixing. Each of these processes are thought to be common to all atmospheres, including terrestrial planets, the giant planets, exoplanets, and even brown dwarfs.

B.2 Why *In Situ* Measurements?

Most of the knowledge on the physical properties of the Sun's giant planets has been gained through *remote sensing* from orbiters, fly-by missions, and ground-based observations. At visible, ultraviolet and near-infrared wavelengths, remote sensing captures scattered and reflected sunlight, with an atmopheric penetration depth to the level of the hazes and upper clouds. At longer wavelengths, from 5-µm to the microwave range, thermal radiation from deeper layers emerges at the top of the planetary atmosphere. Indeed, important physical data addressing planetary composition, structure, and dynamics can be obtained with an orbiting spacecraft, as illustrated by the successful *Cassini* mission. The information content of remote sensing data, however, remains severely limited due to (1) the degeneracies between the effects of temperatures, clouds, hazes, and gas abundances on the emergent spectra, and (2) the limited penetration depth and vertical resolution.

As an example of the latter, the vertical distribution of many gases is strongly determined by chemical and condensation processes: many of the most common elements are locked away in condensed phases (clouds) in the deeper troposphere, hiding the main volatile reservoir from the reaches of remote sensing. The abundances of these gases in the upper atmospheric regions as derived from remote sensing data is therefore not representative of the bulk reservoir. Examples are NH_3 and H_2S (which can form NH_4SH clouds), H_2O, and other minor species. Only by penetrating through the clouds of the "visible" weather layer can the deeper troposphere be sampled and the true atmospheric composition determined. Furthermore, *in situ* measurements constrain the vertical distribution of the tropospheric clouds and hazes and the microphysical properties (size, shape, composition) of cloud particles that not only act as storage for elements, but also strongly influence the radiation field, and the chemical and dynamical processes at work in a planet's atmosphere.

In situ measurements also allows us to trace the vertical dynamics of the atmosphere and the redistribution of gaseous material. An example of the latter is the PH_3 profile, where the competing processes of photochemical sinks at high altitudes and sources from below could give a variety of profiles, depending on such factors such as the strength of vertical upwelling. Additionally, a

descent probe remains the only direct technique for measuring wind speeds at depths beneath the visible clouds. Finally, some species such as the heavier noble gases do not have distinct signatures in spectra measured with remote sensing techniques and for these gases, *in situ* measurements is the only option to retrieve their abundances.

A remarkable example of the capability of *in situ* probe measurements is illustrated by the exploration of Jupiter, where key data regarding the noble gas abundances and the helium mixing ratio could only be obtained through measurements by the *Galileo* probe [*3*]. The *Galileo* probe measurements provided new insights into the formation of the solar system. In particular, **the Jovian helium abundance was precisely determined with an accuracy of 2%** [*4*], an accuracy impossible to achieve with remote sensing. The accurate measurement of the atmospheric helium abundance within the giant planets provides a key step towards understanding the fundamental problem of giant planet formation and evolution in planetary systems. Moreover, **the *Galileo* probe revealed the unexpected enrichments of Ar, Kr and Xe with respect to their solar abundances**, suggesting different scenarios for Jupiter's formation (see Sec. B.3.3). Another important result provided by the *Galileo* probe mass spectrometer was the **$^{14}N/^{15}N$ ratio, a value that suggested that Jupiter acquired its N_2 from the PSN reservoir.**

The *Galileo* probe was designed to reach a depth of 10 bars, but survived to pressures exceeding 22 bars, descending into a region depleted in volatiles by unusual "hot spot" meteorology [*5,6*]. Therefore, the *Galileo* probe measurements of H_2O abundances are unlikely to represent Jupiter's bulk composition. The measurements returned by Galileo nevertheless provided a giant step forward in understanding Jupiter. However, the chemical inventory and structure, and the formation processes of the solar system in general and the giant planets in particular cannot be truly understood from the measured elemental and isotopic enrichments of a single giant planet.

***In situ* exploration is the only way to characterize the composition and deep tropospheric structure of the giant planet. In this context, a Saturn probe is the next natural step beyond *Galileo*'s *in situ* exploration of Jupiter [*3*], the remote investigation of Jupiter's interior and gravity field by the *Juno* mission, and the *Cassini* spacecraft's orbital reconnaissance of Saturn. By measuring the chemical inventory of a giant planet, and comparing it with measurements of (i) other giant planets, (ii) primitive materials in comets and asteroids, and (iii) the elemental abundances of the Sun and the local interstellar medium, we obtain crucial knowledge about the formation of our planetary system. Furthermore, knowledge of atmospheric bulk elemental enrichments and isotopic ratios will help to distinguish between the existing formation scenarios.**

The primary objectives to be addressed by an *in situ* exploration of Saturn will extend the *Galileo* probe exploration of Jupiter to a broader context before future exploration of the ice giants. The primary objectives of Saturn *in situ* exploration are detailed below.

B.3 Elemental and Isotopic Composition as a Window on Saturn's Formation

The giant planets in the solar system formed 4.55 Gyr ago from the same PSN material that formed the Sun and the rest of the solar system. The envelopes of the giant planets are dominated by hydrogen and helium, the most abundant elements in the Universe. Protoplanetary disks composed of gas and dust appear to accompany the process of star formation, but with typical lifetimes that do not exceed several million years. This implies that the cores of Jupiter and Saturn had to form much faster than the tens of millions of years needed for the terrestrial planets to reach their final masses [*8-10*] in order to capture their huge hydrogen and helium envelopes. The cores of the ice giants Uranus and Neptune had longer formation timescales than Jupiter and Saturn, because of the low solid surface density at those distances from the Sun, and did not manage to capture large amounts of hydrogen and helium before the disk gas dissipated [*11,12*]. As a result, the masses of their atmospheres are small compared to their ice/rock cores.

A comparative study of the composition of the gas and ice giant planets provides information on spatial gradients in the physical/chemical properties of the solar nebula as well as on stochastic effects that led to the formation of the solar system. Data on the overall composition and structure of the giant planets, which hold more than 95% of the non-solar mass of the solar system, remain scarce. The formation of the giant planets is generally thought to follow the core accretion model in which a dense, icy core grows to a critical mass, followed by gravitational capture of a hydrogen-helium envelope [*13,8*]. When the possibility of planet migration is included [*14,15*], this model can explain the location of many recently discovered

exoplanets [*16,17*]. An alternative scenario for the formation of giant planets is the gravitational instability model [*18,19*] in which the planets form from the local contraction of a gas-dust clump resulting from gravitational instability in the disk. Each of these formation scenarios, core accretion and gravitational instability, carries different compositional signatures.

Formation and evolution models indicate that the total mass of heavy elements in Jupiter may be as high as $42\,M_{\oplus}$ [*20*] and $25\,M_{\oplus}$ in Saturn [*21*], thus favoring the core accretion hypothesis. Using the composition of the well-mixed troposphere of a planet to infer the properties of the planet's deep interior requires precise measurements of the composition of the troposphere. Remote sounding is unable to provide the necessary information due to a lack of sensitivity to the composition beneath the weather layer. Most questions can only be addressed by *in situ* exploration, although the NASA Juno mission will attempt to address the question of Jupiter's bulk water abundance remotely via microwave sounding. However, Juno measurements will depend strongly on the assumptions made about i) the vertical temperature profile in the envelope and ii) the opacity contributions of H_2O, H_2S, and NH_3, which are difficult to distinguish.

The availability of metals, oxides, silicates, and ices is expected to vary spatially within the PSN, from refractory materials in the warm inner nebula to a variety of ices of water, CH_4, CO, NH_3, N_2, and other simple molecules in the cold outer nebula. Turbulent radial mixing and the evolution of the pressure-temperature gradient in the disk could have led to distinct regions where some species dominated over others (e.g., the water ice snowline or regions where N_2 is the dominant N-bearing species). Furthermore, migration of the giant planets during their evolution could have provided them access to different materials at different epochs. The bulk composition of the giant planets therefore depends on the timing and location of planet formation, possible subsequent migration, and delivery mechanisms for the heavier elements.

It should be noted, however, that when atmospheric measurements are used to infer planetary composition and to reveal information on planets' origins, it must be *assumed* that the atmospheric composition is illustrative of the compositional building blocks accreted by the envelope. This is a fairly good assumption in the case of the gas giants where the planets are fully convective. Within a fully convective planet the materials are expected to be homogeneously mixed beneath the clouds, with little vertical dependence on composition.

Saturn and Jupiter are probably fully convective but possible compositional heterogeneities may be the outcome of the formation process [*8*] and/or the erosion of a primordial core that could mix with the surrounding metallic hydrogen [*22,23*]. In addition, it is possible that double diffusive convection occurs in the interiors of giant planets [*24,25*]. If a molecular weight gradient is maintained throughout the planetary envelope, double-diffusive convection would take place, and the thermal structure would be different from the one that is generally assumed using adiabatic (i.e., fully convective) models, with much higher center temperatures and a larger fraction of heavy elements. In this case, the planetary composition can vary with depth and, therefore, the measured elemental abundances relative to H_2 would be lower in the upper envelope than at depth. However, even in this case, the relative abundances between heavy elements should remain constant regardless the considered depth.

The precise determination of the volatile abundances by *Hera* will be used to constrain interior models and distinguish between the different formation scenarios.

In the following, we first review the molecular, elemental and isotopic measurements that have been made at Saturn and Jupiter. We then point out the measurements that are missing at Saturn needed to establish a useful comparison with the *Galileo* data.

B.3.1 Molecular and Elemental Measurements Made at Jupiter and Saturn

The abundances of most significant volatiles measured at Jupiter and Saturn are given in Table B.1. We refer the reader to [*26-28*] for a more exhaustive list of disequilibrium species identified (or for other minor species presumably identified) in Jupiter's and Saturn's atmospheres. Only upper limits on the abundances of hydrogen halides have been derived from the remote sensing of these species in Saturn's atmosphere. Improved measurements must be made *in situ* by a descent probe.

The abundances of CH_4, NH_3, H_2O, H_2S, Ne, Ar, Kr and Xe in Jupiter's atmosphere have been measured by the *Galileo* Probe Mass Spectrometer (GPMS) [*29,30*]. The value of H_2O abundance reported for Jupiter in Table B.1 corresponds to the deepest measurement made by the probe (at 17.6-

20.9 bar) and is probably much smaller than the planet's bulk water abundance [*31-35*], *which remains unknown* [*26,30*]. The *Juno* mission arrived at Jupiter in July, 2016 is expected to provide an estimate of the deep tropospheric O/H ratio. The abundance of He in Jupiter has also been measured *in situ* by a Jamin-Mascart interferometer with a better accuracy level than the GPMS instrument also onboard the *Galileo* probe [*4*]. PH_3, is the most abundant disequilibrium species in Jupiter's upper troposphere whose abundance has been determined remotely via infrared sounding from Earth and from the Cassini mission [e.g., *36-40*].

In the case of Saturn, only the abundances of CH_4, PH_3, NH_3, H_2O, He and indirectly that of H_2S have been measured. Unfortunately, most of these determinations have limitations inherent to the use of remote sensing, implying the necessity of performing *in situ* measurements to get more accurate results and to provide ground truth calibration for remote sensing. Because CH_4 does not condense in Saturn's atmosphere, its determination from the analysis of high spectral resolution observations from CIRS [*41*] is probably the most accurate measurement among the listed species. Similar to Jupiter, PH_3 has been determined remotely in Saturn from *Cassini*/CIRS observations at 10 μm [*36*]. However, just as for Jupiter, PH_3 is a disequilibrium species in Saturn's upper troposphere and its measured abundance might not reflect the bulk envelope value. The NH_3 abundance corresponds to the deepest value derived by Fletcher, et al. [*42*] who analyzed Saturn's tropospheric composition from *Cassini*/VIMS spectroscopy, and is broadly consistent with centimeter-wave measurements by the Cassini RADAR experiment. However, the true abundance below the clouds could be significantly larger because the condensation layer of NH_3 is possibly deeper, and significant N might be removed by the formation of the NH_4SH cloud at higher pressures. Tropospheric H_2O has been inferred in Saturn via the Short Wavelength Spectrometer Instrument onboard the Infrared Space Observatory (ISO-SWS) [*43*]. However, H_2O appears strongly unsaturated at this altitude (~3 bar level), implying that its bulk abundance is likely higher than the measured one. The H_2S measured abundance must be taken with caution. It is quoted from the indirect determination made by Briggs et al. [*44*] who investigated the influence of models of NH_3-H_2S-H_2O cloud decks on Saturn's atmospheric opacity at microwave wavelengths. The He abundance in Saturn's atmosphere derives from a reanalysis of Voyager's infrared spectrometer (IRIS) measurements [*45*] and a more stringent measurement is needed to improve interior models. The lack of *in situ* measurements of He in Saturn makes the diagnostic of this primordial parameter incomplete. Also, the *in situ* measurements of the abundances of Ar, Kr and Xe in Saturn and the reassessment of the abundances of C, N and S are necessary to understand Saturn's formation conditions in the PSN and compare them to those inferred for Jupiter from the *Galileo* measurements. Several formation scenarios can be envisioned for Saturn, each of which reflects a different pattern of noble gas abundances (see Section B.3.3).

Table B.1 Observed compositions of the atmospheres of Jupiter and Saturn (major volatiles)

	Jupiter			Saturn		
Species X	X/H_2	$\Delta(X/H_2)$	Reference	X/H_2	$\Delta(X/H_2)$	Reference
CH_4	2.37×10^{-3}	5.70×10^{-4}	[30]	5.33×10^{-3}	2.30×10^{-4}	[41]
NH_3	6.64×10^{-4}	2.54×10^{-4}	[30]	4.54×10^{-4}	1.14×10^{-4}	[42]
$H_2O^{(a)}$	4.90×10^{-4}	1.60×10^{-4}	[30]	2.0×10^{-7}	-	[43]
PH_3	2.15×10^{-6}	1.16×10^{-7}	[36]	7.28×10^{-6}	4.80×10^{-7}	[36]
H_2S	8.90×10^{-5}	2.10×10^{-5}	[30]	3.76×10^{-4}	-	[44]
He	1.57×10^{-1}	3.00×10^{-3}	[4]	1.35×10^{-1}	2.50×10^{-2}	[45]
$Ne^{(b)}$	2.48×10^{-5}	2.80×10^{-7}	[29]	-	-	-
Ar	1.82×10^{-5}	3.60×10^{-6}	[29]	-	-	-
Kr	9.30×10^{-9}	1.70×10^{-9}	[29]	-	-	-
Xe	8.90×10^{-10}	1.70×10^{-10}	[29]	-	-	-

$\Delta(X/H_2)$ represents the uncertainty on measurement. [(a)]Lower limit; [(b)]Upper limit.

Table B.2 summarizes the enrichments in volatiles observed in Jupiter and Saturn, relative to protosolar values [*46*]. C, N, P, S, Ar, Kr and Xe are all found enriched by a factor ~2 to 4 in Jupiter.

However, C, N and P (the only measured heavy elements) are found enriched by factors of ~10, 0.5-5 and 11.5 in Saturn. Assuming that the measurement made at Saturn is correct, helium appears depleted compared to protosolar values in the two giants. This may be due to its condensation into droplets that "rain out" in the deep interiors of the giant planets [*47*]. The solution of neon in those droplets [*48*] would also explain its apparent depletion in Jupiter but a similar measurement has never been possible on Saturn.

***Hera* will measure Saturn's elemental abundances to provide strong constraints on the bulk composition for direct comparison with Jupiter (Priority 1 measurements in the STM).**

Table B.2 Enrichments in Jupiter and Saturn relatives to Protosun

Species	Jupiter		Saturn	
	E	$\Delta E^{(a)}$	E	$\Delta E^{(a)}$
C	4.3	1.1	9.6	1.0
N	4.1	2.0	2.8	1.1
$O^{(b)}$	0.4	0.1	1.6×10^{-4}	2.9×10^{-5}
P	3.3	0.4	11.2	1.3
S	2.9	0.7	12.0	-
He	0.8	$\sim 10^{-2}$	0.7	0.1
$Ne^{(c)}$	0.1	$\sim 10^{-3}$	-	-
Ar	2.5	0.8	-	-
Kr	2.2	0.6	-	-
Xe	2.1	0.6	-	-

[(a)] Error defined as $(\Delta E/E)^2 = (\Delta X/X_{planet})^2 + (\Delta X/X_{Protosun})^2$. [(b)] Lower limit. [(c)] Upper limit.

B.3.2 Isotopic measurements made at Jupiter and Saturn

Isotopic measurements presented for Jupiter in Table B.3 have been performed primarily by the *Galileo* Probe Mass Spectrometer [*26,29,30,49,50*]. In contrast, very little is currently known about the isotopic ratios in Saturn's atmosphere. Only D/H (in H_2 and methane) and $^{12}C/^{13}C$ (in methane) ratios have been measured to date [*41,51,52*]. The case of D/H is interesting and requires further measurements with smaller errors. The D/H value presently measured in Jupiter's atmosphere is estimated to be larger by some 5-10% than the protosolar value. This slight enrichment would have resulted from a mixing of nebular gas with deuterium-rich ices during the planet's formation [*53*]. Despite of its large error bars, the D/H ratio measured in Saturn appears lower and implies that the contribution of deuterium-rich ices could be less important. An accurate measurement of the D/H ratio in Saturn's atmosphere could provide some constraints on the relative contribution of deuterium-rich ices during the formation of Saturn. Such a constraint is also based on the *a priori* knowledge of the protosolar D/H ratio, which remains relatively uncertain [*53*]. This ratio is estimated from measurements of $^3He/^4He$ in the solar wind, which is corrected for changes that occurred in the solar corona and chromosphere subsequently to the conversion of deuterium into ^3He in the Sun's interior, and to which the primordial $^3He/^4He$ is subtracted. This latter value is estimated from the ratio observed in meteorites or in Jupiter's atmosphere. The measurement of $^3He/^4He$ in Saturn's atmosphere, used as a proxy for protosolar $^3He/^4He$, would therefore complement the scientific impact of D/H measurement.

***Hera* will perform accurate D/H measurements in H_2 and in CH_4, and will precisely constrain the $^3He/^4He$ ratio in Saturn (Priority 2 measurements in the STM).**

The $^{14}N/^{15}N$ ratio presents large variations in the planetary bodies in which it has been measured and remains difficult to interpret. The analysis of Genesis solar wind samples [*54*] suggests a $^{14}N/^{15}N$ ratio of 441±5, in agreement with *in situ* measurements of Jupiter's atmospheric ammonia [*55,56*], which is the equilibrium form of the primordial N_2 accreted by the planet. Terrestrial atmospheric N_2, with a $^{14}N/^{15}N$ ratio of 272, appears enriched in ^{15}N compared to Jupiter and similar to the bulk of ratios derived from the analysis of comet 81P/ Wild 2 grains [*57*]. Measurements performed in Titan's atmosphere, which is dominated by N_2 molecules, lead to $^{14}N/^{15}N$ ratios of 167.7±0.6 and 147.5±7.5 from the *Cassini*/INMS and Huygens/GCMS data, respectively [*58,59*].

Because of the low abundance of primordial Ar observed by Huygens, it is generally assumed that N_2 is of secondary origin in Titan's atmosphere and that N was delivered in a less volatile form, probably NH_3. This statement is supported by the recent measurement of the $^{14}N/^{15}N$ isotopic ratio in cometary ammonia [*61*] between 80 and 190, and is consistent with the $^{14}N/^{15}N$ isotopic ratio measured in Titan. A lower limit (> 500) has been found in Saturn from recent IRTF observations [*60*], suggesting that its $^{14}N/^{15}N$ ratio is closer to the Jovian value than the one measured in Titan.

***Hera* will precisely measure the $^{14}N/^{15}N$ ratio in Saturn, allowing direct comparison with Jupiter and the solar wind (Priority 2 measurements in the STM).**

Table B.3 Isotopic ratios measured in Jupiter and Saturn

	Jupiter			Saturn		
Isotopic ratio	Measurement	Uncertainty	Ref.	Measurement	Uncertainty	Ref.
D/H (in H_2)	2.60×10^{-5}	0.70×10^{-5}	[50]	1.70×10^{-5}	$^{+0.75}_{-0.45} \times 10^{-5}$	[51]
				1.80×10^{-5}	$\pm 0.5 \times 10^{-5}$	[52]
$^{3}He/^{4}He$	1.66×10^{-4}	0.05×10^{-4}	[50]	-	-	
$^{12}C/^{13}C$ (in CH_4)	92.6	$^{+4.5}_{-4.1}$	[49]	91.8	$^{+8.4}_{-7.8}$	[41]
$^{14}N/^{15}N$ (in NH_3)	434.8	$^{+65}_{-50}$	[30]	-	> 500	[60]
$^{20}Ne/^{22}Ne$	13.0	2.0	[29]	-	-	-
$^{36}Ar/^{38}Ar$	5.6	0.25	[29]	-	-	-
^{128}Xe/total Xe	0.018	0.002	[26]	-	-	-
^{129}Xe/total Xe	0.285	0.021	[26]	-	-	-
^{130}Xe/total Xe	0.038	0.005	[26]	-	-	-
^{131}Xe/total Xe	0.203	0.018	[26]	-	-	-
^{132}Xe/total Xe	0.290	0.020	[26]	-	-	-
^{134}Xe/total Xe	0.091	0.007	[26]	-	-	-
^{136}Xe/total Xe	0.076	0.009	[26]	-	-	-

The isotopic ratios of carbon, oxygen and the noble gases Ne, Ar, Kr, and Xe should be representative of their protosolar values. Only small variations are observed for the $^{12}C/^{13}C$ ratio in the solar system irrespective of the body and molecule in which it has been measured. The ratio at Jupiter and Saturn appears compatible with the terrestrial $^{12}C/^{13}C$ value of 89. Table B.3 gives the Saturn $^{12}C/^{13}C$ value of 91.8 measured with the *Cassini*/CIRS [*41*] but with large uncertainties. A new *in situ* measurement of this ratio should help confirm that carbon in Saturn is also representative of the protosolar value (and different from the one present in the local Interstellar Medium (ISM) since ^{13}C is created in stars). The oxygen isotopic ratios also constitute interesting measurements to be made in Saturn's atmosphere. The terrestrial $^{16}O/^{18}O$ and $^{16}O/^{17}O$ isotopic ratios are 499 and 2632, respectively [*62*]. At the high accuracy levels possible with meteorites analysis these ratios present some small variations. Measurements performed for solar system objects like comets, far less accurate, match the terrestrial $^{16}O/^{18}O$ value (with uncertainties being typically a few tens). However no $^{16}O/^{18}O$ ratio has been published for Saturn's atmosphere. To date, the only $^{16}O/^{18}O$ measurement made for a giant planet [*63*] was obtained from ground-based IR observations in Jupiter's atmosphere with a large uncertainty (1-3 times the terrestrial value).

***Hera* will measure the $^{20}Ne/^{21}Ne/^{22}Ne$, $^{36}Ar/^{38}Ar$, $^{12}C/^{13}C$, $^{14}N/^{15}N$, $^{16}O/^{17}O/^{18}O$, $Xe/^{130}Xe/^{132}Xe/^{134}Xe/^{136}Xe$ in Saturn and further our understanding of its origin (Priority 2 and 3 measurements in the STM).**

B.3.3 Constraints expected on Saturn's formation from in situ measurements

To interpret the volatile enrichments in the atmospheres of Jupiter and Saturn, several theories connecting the thermodynamic evolution of the PSN to the formation conditions of the giant planets have been proposed. The main scenarios proposed to explain Jupiter's composition are summarized below. Because each of these scenarios present different predictions for Saturn's composition (see

Fig. B.1.), *in situ* measurements will allow Hera to dinstinguish between the scenarios.

- *Scenario A: Amorphous Ice*

The model proposed by Owen, et al., [*3*] is the first attempt to explain the volatile enrichments measured in Jupiter's atmosphere. In the Amorphous Ice scenario, the basic assumption is that volatiles present in Jupiter's atmosphere were trapped in amorphous ice in the protosolar nebula. According to this model, amorphous ices originated in the ISM and survived the formation of the protosolar nebula. Once agglomerated from these ices, the fraction of the icy planetesimals that vaporized when entering the envelope of the growing Jupiter engendered the observed volatile enrichments. If correct, this scenario predicts that *the heavy elements O, C, N, S, Ar, Kr and Xe should have the same enrichment value between them in Saturn's atmosphere (see Fig. B.1)*. In this case, comets as well as Kuiper Belt Objects would have also been accreted from amorphous ices.

- *Scenario B: Crystalline Ice*

An alternative interpretation of the volatile enrichments measured in Jupiter is the one proposed by Gautier et al. [*32*] and in subsequent papers [*9,10,33,65,66*]. In this scenario, instead of condensing at lower temperatures, water vapor crystallized and trapped the volatiles in the form of clathrates or hydrates (in the case of NH_3) in the 40-90 K range. The case of CO_2 is special because this species condenses at relatively high temperature. All ices then agglomerated and formed the planetesimals that were ultimately accreted by Jupiter. However, the theory of the trapping by clathration is subtle since it occurs in a cooling nebula and consumes water ice. Once the water ice is depleted, clathration stops. The reports cited above postulate that the amount of available crystalline water ice was large enough (typically H_2O/H_2 ~twice protosolar (O/H)) to trap the other volatiles in the feeding zone of Jupiter and that the disk's temperature at which the ices formed never decreased below ~40 K. The volatile enrichments can also be explained via the accretion and vaporization in Jupiter's envelope of icy planetesimals made from a mixture of clathrates and pure condensates [*34,35*]. These planetesimals could have formed if the initial disk's gas phase composition was fully protosolar (including oxygen), and if the disk's temperature decreased to ~20 K at the location of planetesimal formation. *These scenarios predict, for instance, that Ar and N_2 are not efficiently trapped in the planetesimals, in contrast with H_2S and Xe. This implies that the Ar and N enrichments (relative to protosolar) should be moderate in Saturn's atmosphere, at least compared to S and Xe, as shown by Fig. B.1.*

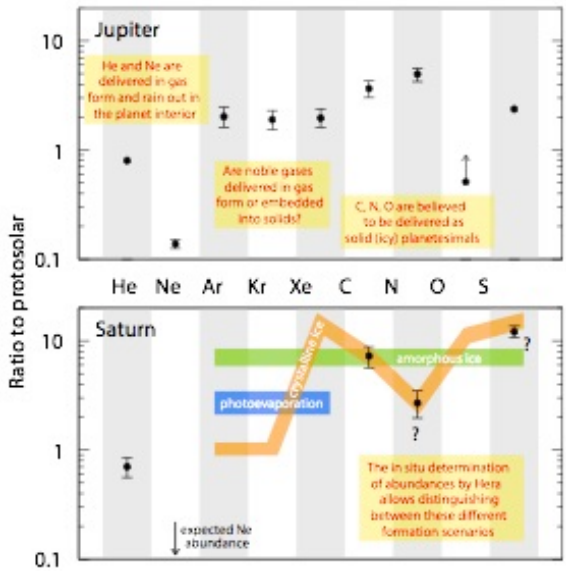

Fig. B.1 *Elemental abundances measured in the tropospheres of Jupiter and Saturn (bottom) in units of their abundances in the PSN (adapted from [64]). The different formation scenarios are shown in green (amorphous ices), pink (clathrates (crystalline ice)) and blue (photoevaporation).*

- *Scenario C: Disk Photoevaporation*

To account for the enrichments in heavy noble gases observed in Jupiter's atmosphere, Guillot and Hueso [*67*] proposed that Ar, Kr, and Xe condensed at ~20-30 K onto the icy amorphous grains that settled in the cold outer part of the disk nebula midplane. These noble gases would have been released in gaseous form in the formation region of giant planets at a time when the disk would have been chemically evolved due to photoevaporation. The combination of these mechanisms would have led to heavy noble gas enrichment relative to protosolar in the disk's gas phase from which the giant planets would have been accreted. *In this scenario, the noble-gas enrichment would have been homogeneous in the giant planets formation region. On the other hand, O, C, N, S, would have been delivered by solids following Scenarios A or B. Therefore, this model predicts that Ar, Kr and Xe should have the same enrichment value between them in Saturn's atmosphere, which would be identical to the one observed in Jupiter for these species (see Table B.2). This value is substantially smaller than the one predicted by the crystalline ice scenario for Xe [68]. Comparison between C, N*

and S enrichments in Saturn's atmosphere would allow disentangling between Scenarios A and B for the contribution of solids.

***Hera*'s measurements will discriminate between the competing formation scenarios, providing new insights into the processes forming Saturn and, by extension, the planets in the Outer Solar System (Priority 1 measurements in the STM).**

B.4 Saturn's Atmospheric Phenomena

The giant planets are natural laboratories for the study of fluid dynamics without the complicating influences of terrestrial topography or ocean-atmosphere coupling. However, remote sensing can only provide access to a limited range of altitudes from the cloud-forming layer upwards into the middle atmosphere. Furthermore, the vertical resolution of "nadir" remote sensing is small and regions either below the top-most clouds or in the middle/upper atmosphere are largely inaccessible, limiting our knowledge of the vertical temperatures, densities, horizontal and vertical winds and waves, compositional profiles and cloud/haze properties. *Hera* will provide the first direct sampling of Saturn's temperatures, winds, composition and clouds, and the "ground-truth" for the myriad physical and chemical processes at work within its atmosphere.

Hera's *in situ* exploration of Saturn, the second gas-giant world, will place the discoveries made at Jupiter by the *Galileo* probe into a much broader context and, when combined with the wealth of remotely-sensed data from *Cassini*, will permit comparative planetology to enhance our knowledge of this unique class of astrophysical objects.

In the following sections, we describe how the *Hera* probe, penetrating from the upper atmosphere (μbar pressures) into the convective weather layer to a minimum depth of 10 bars, will contribute to our knowledge of Saturn's atmospheric structure, dynamics, chemistry and cloud-forming processes. We also discuss how the *Hera* spacecraft could provide additional constraints on Saturn's interior by performing measurements of the planet's light curve during its journey.

B.4.1 Saturn's Dynamics and Meteorology

Saturn's atmosphere is somewhat different from Jupiter's, with fewer large-scale vortices and a more subdued banded structure in the visible, superimposed onto hemispheric asymmetries in temperatures, cloud cover and gaseous composition as a result of Saturn's seasonal cycles (see [*69-72*] for detailed reviews). Despite this globally variable atmosphere in the horizontal, a single entry probe will provide unique insights in the vertical dimension by characterizing the changing environmental conditions and dynamical state as it descends from the stably-stratified middle atmosphere to the convectively-unstable troposphere. Although *in situ* probes may seem to provide one-dimensional vertical results, a horizontal dimension is also provided by Doppler tracking of the probe trajectory during its descent [*73*] as it is buffeted by Saturn's jet streams and eddies.

- *Atmospheric Stability and Transition Zones*

The descending probe will sample both the radiatively controlled upper atmosphere (e.g., the stratosphere and upper troposphere) and also the convectively driven troposphere (e.g., the cloud-forming region), precisely constraining the static stability, radiative-convective boundary and the levels of the tropopause, stratopause, mesopause and homopause. Thermal-structure measurements of Saturn will be directly compared to those on Jupiter to understand the energetic balance between solar heating, thermal cooling, latent heat release at cloud level, wave heating and internal energy for driving the complex dynamics of all the different atmospheric layers on the giant planets.

The atmospheric structure instrument on *Hera* will measure continuous profiles of the temperature, density (requiring the mean molecular weight to be determined by another instrument [*74,75*]), buoyancy frequency and static stability as a function of altitude to identify the dominant instability mechanisms. Temperatures and densities in the upper atmosphere will be determined via the entry deceleration caused by atmospheric drag, connecting the high temperature thermosphere at nanobar pressures to the middle atmosphere at microbar and millibar pressures (e.g., [*76*]).

Hera measurements of pressure and temperature will precisely determine the vertical profile of atmospheric static stability through the upper troposphere. Hera will detect the radiative-convective boundary if it exists along the probe descent, and will determine the locations of the tropopause, stratopause, mesopause and homopause (Priority 2 and 3 measurements in the STM).

- *Wave Activity*

Perturbations of the temperature structure due to vertical propagation of gravity waves are expected to be common features of the stably stratified middle atmospheres on both terrestrial planets and gas giants. Wave activity is a key coupling mechanism between the troposphere and middle/upper atmosphere, being responsible for phenomena like the Quasi-Biennial Oscillation on Earth [*77*], which is thought to have a counterpart on Saturn [*78*]. Waves are a useful diagnostic of the background state of the atmosphere, as their propagation relies on certain critical conditions (e.g., the static stability and vertical shears in the zonal wind profile, which cannot be revealed with enough resolution by remote sensing alone). Energy and momentum transfer via waves serve as a source of both heating and cooling for the hot thermospheres, whose temperatures far exceed the expectations from solar heating alone, although the precise origin of the heating source has never been satisfactorily identified (e.g., [*72*, *79*]).

Although a probe at a single entry point cannot necessarily distinguish between wave types, nor measure the horizontal wavelength, it can measure the vertical wavelength of middle atmospheric waves. For example, the periodicity of gravity waves measured by the *Galileo* probe on Jupiter permitted the reconstruction of the zonal wind profile from the lower thermosphere to the upper troposphere [*80*] and identification of the homopause (where molecular and eddy diffusion become comparable and gravity waves deposit their energy), above which the atmosphere separates into layers of different molecular species. By measuring the propagation, periodicity and sources of wave activity on Saturn,

***Hera* will reveal the properties of the background medium and the coupling of the "weather layer" to the middle atmosphere (Priority 3 measurements in the STM).**

- *Profiling Atmospheric Winds*

In situ exploration will help address one of the most enduring mysteries for the giant planets - what powers and maintains the zonal winds responsible for the planetary banding, how deep do those winds penetrate into the troposphere, and what are the wind strengths in the middle atmosphere? Remote sensing of temperature contrasts (and hence wind shears via thermal wind relationships) can reveal the slow overturning of the stratosphere, and inferences about the deep winds can be made from the properties of atmospheric plumes at the cloud-tops (e.g., [*81*]). However, remotely observed cloud motions are highly ambiguous due to uncertainties in the cloud depth; the clouds themselves may be imperfect tracers of the winds; and vertical temperature profiles (and hence wind shears) are degenerate with the atmospheric composition. *In situ* measurements of the vertical variation of winds, temperatures and cloud locations by the *Hera* probe will help resolve many of these ambiguities.

The *Galileo* probe Doppler Wind Experiment (DWE) reported that Jovian winds were at a minimum at the cloud tops (where most of our understanding of zonal winds and eddy-momentum fluxes originate from), and increased both above [*80*] and below [*73*] this level. *Hera*'s measurements at Saturn will test whether this is a standard feature of giant planet weather layers.

Direct measurements of winds by the Hera probe will establish the reliability of extrapolations from the jets at the cloud tops into the deeper troposphere and higher stratosphere (Priority 3 measurements in the STM).

B.4.2 Saturn's Clouds and Composition

Vertical profiles of atmospheric composition (both molecular and particulate) are essential to understanding the dynamical, chemical, condensation, and disequilibrium processes at work in shaping Saturn's atmosphere. The *Galileo* probe compositional and cloud measurements revealed an unexpectedly dry region of the Jovian troposphere, depleted in clouds and volatiles [*3*], which was consistent with ground-based observations of the probe entry into a warm cyclonic region [*6*]. For this reason, several aspects of the compositional profile measured by *Galileo* are not thought to be globally representative of Jupiter's atmosphere. A probe into a more "typical" region of Saturn's atmosphere could provide a more representative sampling of a giant planet. Context observations by a camera on the carrier would characterize the probe entry site better than it was possible at the time of the *Galileo* probe.

- *Clouds and Hazes*

A poor understanding of cloud and haze formation within planetary atmospheres of our solar system may be the key parameter limiting our ability to interpret spectra of extrasolar planets and Brown Dwarfs (e.g., [*82*]). Although equilibrium cloud condensation models [*83*], combined with the

sedimentation of condensates to form layers, have proven successful in explaining the broad characteristics of giant planet clouds, including methane ice clouds on the ice giants and ammonia ice clouds on the gas giants, these models remain too simplistic to accurately reproduce the precise location, extent, and microphysics of the observed cloud decks. The *Galileo* probe results defied expectations of equilibrium condensation by revealing cloud bases at 0.5, 1.3, and 1.6 bar, and a tenuous structure from 2.4-3.6 bars and no evidence for a deep water cloud [*84,85*]. The expected spectral signature of pure ammonia ice has only been detected in small, active regions of Jupiter [*86*], and is likely obscured elsewhere by a coating or mixing with other products, such as photolytically produced hydrocarbons hydrazine or diphosphine [*86*]. The spectral properties of these mixtures are poorly known, rendering cloud remote sensing highly ambiguous. Furthermore, Saturn's upper troposphere appears to be dominated by a ubiquitous haze whose composition has never been determined and is potentially unrelated to condensed volatiles (although diphosphine, P_2H_4, a product of the UV destruction of phosphine, remains an intriguing possibility). An equilibrium cloud model applied to Saturn with a 5-fold enhancement of heavy elements over solar abundances predicts NH_3 condensation at 1.8 bar, NH_4SH near 4 bar and an aqueous ammonia cloud (merging with a water ice cloud) in the 10-20 bar range [84], all of which could be sampled by the *Hera* probe if it survives down to these depths. However, ammonia and water ice signatures have been identified only recently, in the powerful updrafts associated with a powerful springtime storm in 2010-2011 [87].

The only way to resolve questions of deep atmospheric composition and structure is by *in situ* sampling of the clouds and hazes formed there using instruments designed to measure the particle optical properties, size distributions, number and mass densities, optical depth and vertical distribution (e.g., with a nephelometer and net flux radiometer [*88,89*]). Combined with the vertical profiles of condensable volatiles (e.g., NH_3, H_2S, and H_2O) and photochemically produced species (hydrocarbons, hydrazine N_2H_4, diphosphine), this will give an estimate of the composition of Saturn's clouds and upper hazes for the first time. Saturn's atmosphere provides the most accessible cloud decks for this study after Jupiter since condensates of NH_3 and H_2O are locked out at considerably higher pressures on the ice giants, the most useful comparison to remote sensing data (e.g., from *Cassini*), and the most similar composition to Jupiter for a full understanding of gas giant clouds.

Furthermore, the *in situ* exploration of Saturn's weather layer will provide new insights into the cloud-forming processes and the dynamics below the levels normally visible to remote sensing. Lightning flashes most likely exist in the atmospheres of all gas planets [*90*], and the *Galileo* Probe lightning and radio emission detector (LRD) used a magnetic antenna to detect RF signals of lightning from Jovian clouds that appeared to be about 100 times more powerful than terrestrial lightning [*91*]. Lightning in Saturn's atmosphere has been detected by Voyager and *Cassini* measurements of radio emissions [*92*] and direct optical flash observations [*89*]. Saturn thunderstorms tend to appear infrequently at the equator and in the 'storm alleys' at the latitudes of 35° north and south. The flashes originate from a depth of 125-250 km below the 1-bar level, most likely in the water clouds, and would be studied by the *Hera* probe.

Hera will explore Saturn's clouds and hazes to determine the precise location, structure, optical properties, size distributions, number and mass densities, and composition of the aerosols comprising the clouds and hazes. The relationship between the location, structure, and chemistries of the clouds and hazes and the atmospheric vertical profiles of condensable volatiles and photochemically produced species, and the atmospheric dynamics will be studied extensively (Priority 2 and 3 measurements in the STM).

- *Atmospheric Chemistry and Mixing*

Molecules can be removed from the gas phase by condensation; modified by vertical mixing and photolysis; and deposited from exogenic sources (icy rings, satellites, interplanetary dust, comets, etc.), causing abundance profiles to vary with altitude and season. Indeed, all giant planets exhibit rich chemistry due to the UV photolysis of key atmospheric species. Their stratospheres are dominated by the products of methane photolysis [*93*], which descend into the troposphere to be recycled by thermochemical conversion. On Jupiter, the *Galileo* probe measured hydrocarbon species in the 8-12 bar region, although the balance of ethane (expected to be the most abundant hydrocarbon after methane) with other species led to suspicions that the hydrocarbon detections were measurement artifacts rather than of atmospheric origin [*94*]. Saturn's troposphere includes saturated volatiles in

trace amounts above the cloud tops, but only ammonia gas (in addition to CH_4) is abundant enough to be measured by remote sensing. In addition to the volatiles, Saturn's troposphere features a host of disequilibrium species, most notably phosphine (PH_3), dredged up from the interior by vigorous atmospheric mixing [*36*]. Measurements of additional trace species in the troposphere (GeH_4, AsH_3, CO) will provide constraints on the strength of atmospheric mixing from deeper levels below the clouds.

Discoveries of currently undetected trace chemical species (HCN, HCP, CS, methanol, formaldehyde [*28*]) and hydrogen halides (HCl, HBr, HF and HI [*27*]) would reveal coupled chemistry due to lightning or possibly due to shock chemistry from planetary impacts. Sensitive mass spectrometry of these species, combined with *Hera*'s measurements of atmospheric temperatures and haze properties, could reveal the processes governing the soup of atmospheric constituents on the giant planets. Once again, Saturn's trace species are expected to be the most accessible of the solar system giants after Jupiter.

Hera will measure abundance profiles, will reveal and place constraints on atmospheric processes that govern the profile of many constituents, and will determine the relative roles of UV photolysis of methane and downward precipitation from the stratosphere, tropospheric thermochemical conversion, and the mixing of disequilibrium species due to vigorous convection (Priority 2 and 3 measurements in the STM).

C. SCIENCE REQUIREMENTS

C.1 Measurement priorities

Hera will reveal new insights into the vertical structures of temperature and static stability, density, chemical composition, and clouds during descent from the stable upper/middle atmosphere to the deeper convective troposphere. The Hera probe will directly sample the condensation cloud decks and ubiquitous hazes whose composition, altitude and structure remain ambiguous due to inherent difficulties with remote sensing. In addition to bringing fundamental constraints on Saturn's formation conditions, *in situ* measurements will show how Saturn's atmosphere flows at a variety of different depths above, within and below the condensate clouds. The depth of probe penetration determines whether it can access the well-mixed regions for key condensable volatiles. In the present case, a relatively shallow probe penetrating to ~10 bar would *in principle* sample NH_3 and H_2S both within and below their respective cloud bases, in the well-mixed regions of the atmosphere to determine the N/H and S/H ratios, in addition to measuring noble gases and isotopic ratios. Note that the measurement of N_2 would likely be a lower limit since ammonia is highly soluble in liquid water. Also, because the hypothesized Saturn water cloud is expected to be deeper than 10 bars [*84*], the prospect of measuring directly the deep O/H ratio remains unlikely if the probe does not survive beyond its design limit. An alternate possibililty is to precisely measure the abundance of species that are limited by reactions with the tropospheric water such as CO to constrain the ratio of H_2O/H_2. Nevertheless, measuring Saturn elemental abundances (in particular He and other noble gases, as well as other cosmogenically-common species) and isotopic ratios using a shallow entry probe would provide a vital comparison to *Galileo*'s measurements of Jupiter, and a crucial "ground-truth" for the remote sensing investigations by the *Cassini* spacecraft.

On the next page the key *in situ* measurements that should be carried out by the *Hera* probe are ranked in order of priority.

Table C.1. Suite of scientific instruments

Instrument	Measurement
Mass Spectrometer (MS)	Elemental and chemical composition Isotopic composition High molecular mass organics
Atmospheric Structure Instrument (ASI)	Pressure, temperature, density, molecular weight profile, lightning and atmospheric conductivity
Radio Science Experiment (RSE)	Measure winds, speed and direction Chemical composition
Nephelometer	Cloud structure, solid/liquid particles
Net-flux radiometer (NFR)	Thermal/solar energy profile

C.2 Required instruments

The scientific requirements discussed above are addressed with a suite of scientific instruments carried by the Hera probe (Table C.1). **At a minimum, the science payload must contain two core instruments: a Mass Spectrometer (MS) and an Atmospheric Structure Instrument (ASI). These two instruments are sufficient to cover all Priority 1 and Priority 2 measurements.** The MS will provide key measurements of the chemical and isotopic composition of Saturn's atmosphere. The key *in situ* measurements performed by the ASI will include accelerometry during the probe entry phase and pressure, temperature, and mean molecular weight during descent. The atmospheric density is derived from these measurements.

A Nephelometer, a Net flux Radiometer (NFR), and a Radio Science Experiment (RSE) requiring an ultrastable oscillator will address the Priority 3 measurements.

The RSE will include both a Doppler Wind Experiment (DWE) dedicated to the measurement of the vertical profile of the zonal (east-west) winds along the probe descent path and an absorption

measurements (AAbs) providing a indirect measurement of atmospheric composition. The Nephelometer will investigate the composition and precise location of cloud layers, and the Net Flux Radiometer will measure the thermal profile and heat budget in the atmosphere.

The Science Traceability Matrix is presented in Table C.2.

C.3 Probe entry zone

In the present proposal, the trajectory selection is based on the selected carrier option, launch vehicle capabilities, and the available probe thermal protection capability. The interplanetary trajectory and the probe entry location are inseparably linked. Saturn's extensive ring system presents a severe collision hazard to an inbound probe. For various declinations of the spacecraft's approach asymptote, some latitudes are inaccessible because the trajectories to deliver to those latitudes would impact the rings. Also, although it is possible to adjust the inclination of the approach orbit for purposes of accessing desired latitudes, this approach can greatly increase the atmosphere-relative entry speeds, possibly driving the mission to an expensive heat shield material technology development (see Sec. E). During the ESA assessment study, the issues of probe entry locations, approach and entry trajectories, and probe technologies would have to be treated together. With a single entry probe, the selected entry site must be carefully studied. *Saturn's equatorial zone is one potential site from the scientific point of view for a single entry probe* because of its meteorological activity that combines the emergence of large-scale storms [*95*], vertical wind shears in the troposphere [*96*], and upwelling enhanced volatiles and disequilibrium species [*36,42*]. However, this may not be typical of Saturn's atmosphere, so detailed trades would need to be discussed during the study phase. Eastward jets (particularly the anticyclonic branch of eastward jets) located at equator might be good locations to retrieve the deep values of volatiles at higher levels in the atmosphere [*97*]. A primary requirement is that *volatile-depleted regions must be avoided for the entry site.* These zones are probably located at the cyclones in both poles and may also be located at the so-called "storm-alley" (mid-latitude regions of low static stability able to develop updrafts and downdrafts). In any case, there are several potential entry points and a decision where to enter must also be guided by the design of the thermal protection system of the probe. Envisaging *in situ* measurements in the equatorial region of Saturn appears to be the best compromise between science and engineering.

Science Priorities

Priority 1 measurements focus only on questions related to Saturn's origin. Science Priorities 2 and 3 address questions related to the structure of Saturn's atmosphere and its formation conditions.

Priority 1 measurements:

1.1 The atmospheric fraction of He/H_2 with 2% accuracy on the measurement (same accuracy as *Galileo*). A firm measurement of the He abundance is needed to constrain Saturn's interior;

1.2 The abundances on the chemically inert noble gases Ne, Xe, Kr and Ar with 10% accuracy on the measurement (uncertainties close to those in solar abundances). These elements constitute excellent tracers for the materials in the subreservoirs existing in the Protosolar Nebula;

1.3 The vertical profiles of elemental enrichments in cosmogenically abundant species C, N and S. C/H, N/H and S/H should be sampled with accuracies better than ± 5% (same accuracy as *Galileo*). The precise measurement of these species provides clues regarding the disk's thermodynamic and compositional conditions at the epoch and location of Saturn's formation.

Priority 2 measurements:

2.1 The isotopic ratios in hydrogen (D/H), helium $^{3}He/^{4}He$, carbon ($^{12}C/^{13}C$) and nitrogen ($^{14}N/^{15}N$), to determine the key reservoirs for these species (e.g., delivery as N_2 or NH_3 vastly alters the $^{14}N/^{15}N$ ratio in the giant planet's envelope). $^{3}He/^{4}He$ should be sampled with an accuracy of ± 3% (same as for the *Galileo* measurement). D/H, $^{12}C/^{13}C$, $^{14}N/^{15}N$ should be analyzed in the main host molecules with an accuracy of the order of ± 5% to be compared with values in other solar system reservoirs;

2.2 Atmospheric temperature and pressure throughout the descent to determine (i) static stability as a function of depth though transition zones (e.g., radiative-convective boundary); (ii) acceleration experienced by the probe during its descent; and (iii) the influence of atmospheric waves, vertical winds, and cloud formation on the vertical temperature profile. Continuous measurement of the conductivity profile to aid in understanding Saturnian lightning.

Priority 3 measurements:

3.1 The isotopic ratios in Ne, Ar, Kr and Xe should be measured with accuracy better than ± 1%, to give further constraints on the formation conditions of Saturn in the PSN by providing comparisons with other reservoirs. $^{16}O/^{18}O$ and $^{17}O/^{18}O$ with accuracy better than ± 1%, should be sampled in order to investigate possible O isotopic variations throughout the solar system;

3.2 The vertical distributions of minor and disequilibrium species to study vertical motions (e.g., NH_3, H_2S, H_2O, PH_3, AsH_3, GeH_4 etc) should be measured from the tropopause to below the condensate clouds. P/H, As/H and Ge/H should be sampled with accuracy better than ± 10% (uncertainties close to solar abundances);

3.3 Measurements of the vertical structure and properties of Saturn's cloud and haze layers; including determinations of the particle optical properties, size distributions, number and mass densities, opacity, shapes and, potentially, their composition;

3.4 Determination of the vertical variation of horizontal winds during the descent. This includes a study of the depth of the zonal wind fields, and first measurements of middle atmospheric winds;

3.5 Thermal profile and heat budget in the atmosphere.

Table C.2. Science Traceability Matrix

Science Goals	Science Objectives	Science Priority	Science Questions	Scientific Measurements	Instrument
Understand the formation of the Giant Planets and their roles in the evolution of the solar system	**Determine the composition of Saturn's well-mixed atmosphere beneath the clouds**	**1.1**	What is the abundance of helium relative to H_2?	He/H_2 ratio to an accuracy of 2%	MS
		1.2	What are the well-mixed abundances of the noble gases?	Ne/H, Ar/H, Kr/H, Xe/H to a precision of ± 10%	MS
		1.3	What are the abundance profiles of key cosmogenic species?	C/H, N/H and S/H: ± 5%	MS, ASI, RSE/AAbs
		2.1 **3.1**	What are the most important reservoirs for main isotopes of H, He helium, nitrogen, carbon, oxygen, neon and heavy noble gases?	$^{14}N/^{15}N$, $^{12}C/^{13}C$ D/H: ± 5% $^{3}He/^{4}He$: ± 3% Ne, Ar, Kr and Xe isotopes: ± 1% $^{18}O/^{16}O$, $^{17}O/^{16}O$: ± 1%	MS ASI
Understand Giant Planet atmospheric circulation, the processes by which energy is transferred outwards from their interior, and the structure of the cloud layers.	**Determine the compositional, thermal, and dynamical structure of Saturn's atmosphere**	**2.2**	What is the vertical structure of Saturn's atmospheric temperatures and stability?	Pressure: ± 1% Temperature: ± 1 K from the upper atmosphere to 10 bar.	ASI
		3.4	How do atmospheric winds and wave phenomena vary as a function of depth?	Profile of descent probe telemetry Doppler frequencies Zonal Winds: ±1 m/s from 0.1-10 bar	RSE/DWE
		3.2	How do convective motions and vertical mixing shape the vertical distribution of chemical species?	Vertical profiles of NH_3, H_2S, H_2O, PH_3, AsH_3, GeH_4, CO: ±10%	MS ASI
		3.3	What is the vertical structure, composition and properties of Saturn's cloud and haze layers?	Particle optical properties, size distributions, number and mass densities, opacity, shapes, and composition	Nephelo-meter
		3.5	What is the radiative energy balance of the atmosphere?	Up & down visible flux: ~0.4-5μm; Up & down IR flux: 4-50μm; $\lambda/\Delta\lambda$~0.1-100 ΔFlux ~0.5 Wm^{-2}	NFR

D. PROPOSED SCIENCE INSTRUMENTS

D.1 Overview of Proposed Payload Elements

The *Hera* Saturn Probe mission will conduct *in situ* measurements of the structure, composition and fundamental processes operating within Saturn's atmosphere. Measurements will be made by a suite of instruments on the probe as it descends for up to 75-90 minutes under a parachute from the tropopause near 100 mbar, through the upper cloud decks, down to at least 10 bars. The Tier 1 instruments, designed to address the highest priority science goals, include a Mass Spectrometer and an Atmospheric Structure Instrument. The instruments comprising the Tier 2 payload address lower priority science goals, and include a Net Flux Radiometer, a Nephelometer, and a Radio Science experiment. While all instruments are located on the *Hera* probe itself, one ultrastable oscillator for the Radio Science experiment will be mounted on the Carrier.

All instruments can operate on both the day and night side of Saturn, although the visible channel of the Net Flux Radiometer can only measure the altitude profile of solar energy absorption if the descent is on the dayside. The following section provides the investigation and measurement objectives of each instrument, including the measurement principle, the description of the instrument design, the resource requirements including mass, power, volume, and data rate, interface and calibration requirements, and a summary of technology readiness, heritage, and critical issues (if any). The total data returned from the probe will range from 15 to 20 megabits per channel (30-40 megabits total). A summary table of the main characteristics of the instruments (size, mass, power requirement, data rate and volume) is given at the end of the section (Table D.3).

D.2 *Hera* Mass Spectrometer

D.2.1 Investigation Overview

The chemical, elemental, and isotopic composition of Saturn's atmosphere, and its profile down to the 10 bar level, will give important clues about the solar nebula at the location of Saturn's formation, about the formation of giant planets (in comparison to Jupiter), and the evolution of Saturn's atmosphere to its present state. Additionally, the Hera Mas Spectrometer will provide details of the chemical structure of the atmosphere along the Hera descent path, including the deeper atmosphere not accessible to remote sensing investigations.

Measurement Objective: The measurement objective of the *Hera* Mass Spectrometer (MS) is to provide *in situ* measurements of the chemical, elemental, and isotopic composition of Saturn's atmosphere, and its dependence on pressure/altitude along the descent trajectory of the entry probe. The primary objective of the Hera MS is the determination of the abundances of the major chemical species CH_4, NH_3, H_2O, H_2S, the He/H ratio, and the abundance of the noble gases Ne, Ar, Kr and Xe. Secondary objectives include isotopic ratios of major elements such as H, He, C, and N, the abundances of minor chemical species and the isotopic abundances of noble gases. Tertiary objective are the abundance of the oxygen isotopes.

D.2.2 Measurement Principle

The core of the *Hera* MS is a time-of-flight mass spectrometer (TOF-MS). The TOF-MS has several advantages for space research: i) all masses are measured at the same time, thus there is no need for scanning the mass thereby increasing the sensitivity, ii) the TOF-MS is simple and robust and is very suitable for remote operation on a spacecraft, iii) the TOF-MS is very light-weight. The cadence of mass spectrometric measurements is variable, from mass spectra accumulated every 1-second to integration up to 300 seconds. At suitable times measurements of atmospheric gas are replaced by measurements of calibration gas, and measurements of gas enriched and separated from the bulk atmosphere.

The atmospheric gas will enter the experiment via a gas inlet system with several independent entrances of various conductances, which will cover the pressure range of 0.1 – 10 bar level. The cadence of mass spectra is adjusted such that the vertical resolution is about 1.8 km along descent trajectory, which amounts to about 400 mass spectra along the descent trajectory.

Not all species can be measured directly in the gas entering from the atmosphere, at least not with the desired accuracy. Noble gases, for example, will be separated from the atmospheric inflow and collected by a cryotrap enrichment system. After sufficient enrichment of the noble gases is accomplished they are released to the TOF-MS for a dedicated mass spectrometric measurement while the direct sampling of the atmosphere is interrupted. Similarly, the use of an additional cryotrap for the enrichment of hydrocarbons and other trace species will also be analyzed at regular intervals.

The accuracy of some composition measurements will be enhanced by carrying several

reservoirs of reference gases with an accurately known gas mixture. For example, for the measurement of the He/H ratio, a gas container with a calibrated He/H mixture is part of the *Hera* MS experiment that will allow for the measurement of this ratio with an accuracy of 2% or better. Similarly, containers with a calibrated mixture of noble gases, and with reference gases for key isotopes (H, C, N, and O), are included in the *Hera* Mass Spectrometer.

D.2.3 Design Description / Operating Principle

The *Hera* Mass Spectrometer consists of four units: the TOF-MS, the Tunable Laser Spectrometer (TLS), the gas separation and enrichment system (GSES), and the reference gas system (RGS).

The TOF-MS consists of a pulsed ion source, a time-of-flight drift path, an ion mirror (reflectron), and a fast ion detector. The TOF-MS is a compact instrument and has a mass range of 1 – 1000 u/e, a mass resolution of $m/\Delta m = 1100$, and a very high sensitivity [*98*]. Ions, continuously generated in the ion source, are pulse-extracted, and sent as ion packets along the TOF path with a repetition frequency of 10 kHz, to the detector resulting in a mass spectrum. These spectra are accumulated for a defined integration period (1 – 300 seconds), depending on the desired vertical resolution along the descent trajectory. The integration of many spectra provides for a dynamic range of 6 – 7 decades in each accumulated spectrum; together with various detector gain steps and the gas enrichments at a dynamic range that exceeds 12 decades is achieved.

The Tunable Laser Spectrometer (TLS) [*99*] will be employed as part of the *Hera* MS to make high accuracy measurements of isotopic ratios of the molecules H_2O, NH_3, CH_4, CO_2 and others. TLS employs ultra-high spectral resolution tuneable laser absorption spectroscopy ($\Delta\upsilon = 0.0005\ cm^{-1}$) in the near infra-red (IR) to mid-IR spectral region. TLS is a direct non-invasive, simple technique that for small mass and volume achieves sensitivities at the sub-ppb level for gas detection. Species abundances can be measured with accuracies of a few percent, and isotope determinations have an accuracy of about 0.1%. The TLS system can measure the isotopic ratios of D/H, $^{13}C/^{12}C$, $^{15}N/^{14}N$, $^{18}O/^{16}O$, and $^{17}O/^{16}O$ as demonstrated by the Mars Science Laboratory SAM GC-MS instrument [*100*, *101*].

The GSES consists of a cryotrap, an ion pump, and a non-evaporable getter (NEG), which together are used to achieve the noble gas enhancement. The NEG removes all constituents except methane and the noble gases. The cryotrap traps the products of the NEG process, except for helium and some neon. The ion pump then operates to pump away the helium, which is the second most abundant gas in Saturn's atmosphere, thus enhancing the signal to noise in the remaining noble gases by a factor of about 200. This enrichment cell will be accessed periodically during descent to allow the noble gases to be analysed. The cryotrap for minor species will have a separate gas inlet. It will be heated periodically and a valve opened to allow the descent measurements to be interrupted for analysis.

The Reference Gas System consists of a central manifold and pressure sensor connected to the mass spectrometer via a capillary leak. Reference gas mixtures are stored in stainless steel 1 ml containers at a pressure of approximately 1 bar. Each reference gas will be admitted into the manifold by opening a single valve in a short pulse. These valves have a leak rate of less than 10^{-8} mbar l s^{-1} and a controllable pulse width of less than 1 ms; they are a development from Rosetta - Ptolemy heritage (TRL 5). Alternative valves are the same as used on Philae (TRL 9) but have a higher power requirement and a longer operating cycle of several minutes.

The baseline instrumnet includes 3 reference gas mixtures; a hydrogen/helium mixture, a noble gas mixture and an isotope mixture. The composition of the isotopic reference gas will be a mixture of relatively inactive molecules, e.g. methane, carbon monoxide and nitrogen, depending upon the scientific targets.

The RGS includes an ion pump and non-evaporable getter to remove gases between analyses and allow calibration of the mass spectrometer during cruise, a few hours before atmospheric entry and during the atmospheric descent. The ion pump adds a significant mass to the RGS, which could be reduced by using the GSES pump instead; however this adds to the complexity in the timing between the two systems and potentially results in cross contamination between the reference gases and the atmospheric samples (see Figure D.1).

D.2.4 Mass, Power, Data Rate

Mass and power of the MS elements are summarized in Table D.1. The average data rate during descent is about 2 kbit/s (including 50 bit/s housekeeping data). The total data volume

produced during a 90-minute descent is about 10.7 Mbit of compressed data.

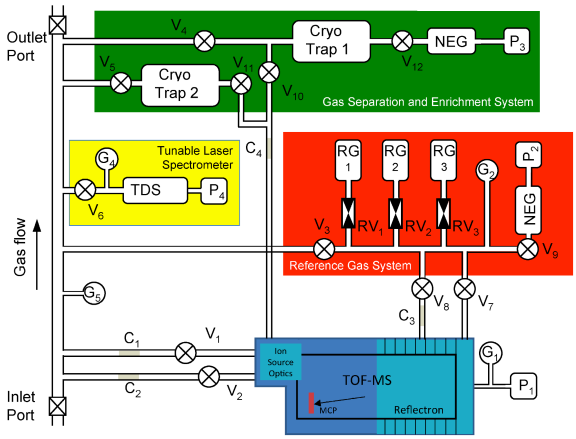

Figure D.1 *Schematics of the Hera MS experiment, with the TOF-MS, the GSES, the RGS, and the TLS units. The elements are valves (V), regulating valves (RV), pressure gauges (G), conductance limiters (C), pumps (P), gas reservoirs (RG), and non-evaporative getter (NEG).*

Table D.1 Specifications of the MS elements

	Mass	Power
TOF-MS	8.2 kg (ion optical system, TOF electronics, DPU, gas entrance system, pumping)	25 watts (full operation)
GSES	4.9 kg (Cryotrap, heaters, valves, pump, electronics)	20 watts (maximum, nominally 1 W and the ion pump power)
RGS	1.2 kg (3 reference gas containers, valves, NEG, ion pump and control electronics)	20 watts (maximum before atmospheric entry, nominally 1 W and the ion pump power)
TLS	1.5 kg	3 watts

D.2.5 Specific/Critical Interface Requirements & Environment Constraints

The *Hera* Mass Spectrometer must be mounted on the entry probe such that the gas sampling entrance is in the atmospheric gas flow during descent. No chemical contamination from the entry probe should enter the gas sampling system during descent. The *Hera* MS is accommodated inside the entry probe in a stable thermal environment. There are no special requirements for radiation and magnetic cleanliness.

The *Hera* MS must be turned on before starting the scientific measurements to execute a warm-up procedure to reach stable operating conditions, including background measurements, instrument optimisation and calibration in time for the scientific operations. The exact turn-on procedure will be elaborated during phase A when more technical details of the entry probe are avaialable. For the direct atmospheric sampling, the GSES, and the TLS and gas chromatograph share a gas flow line with a gas inlet port in the entry probe fore dome at the apex near the stagnation point and an outlet port at the minimum pressure point at the rear of the probe. Metal ceramic devices seal the inlet and outlet ports. The inlet and outlet lines are evacuated after instrument calibration prior to shipment. They will be opened in sequence by redundant pyrotechnic actuators after probe entry and ejection of the probe front shield.

D.2.6 Specific Calibration Requirements

The *Hera* MS will be thoroughly calibrated on ground before delivery for entry probe integration. Before starting scientific operations during descent the *Hera* MS will execute an automatic optimisation programme to define the instrument operation parameters. This is followed by a calibration programme using the reference gases. A replica reference gas system will be stored in similar environmental conditions to the entry probe to monitor any changes during the long cruise. This is particularly important for the hydrogen/helium mixture as both hydrogen and helium will diffuse through the walls of the stainless steel container. Because of the changing temperature environment during descent, calibration using the RGS will be repeated several times during the trajectory.

D.2.7 TRL Assessment & Relevant Heritage

Significant heritage exists for the measurement of the chemical composition during a descent through the atmosphere, for example the Galileo Probe mass spectrometer system [*49*] or the Huygens Gas Chromatograph Mass Spectrometer (GCMS) [*102*]. Over the last two decades TOF

mass spectrometers have been developed for space research, for example on the Rosetta mission [*103*], and offer several advantages over the quadrupole mass spectrometers used before. For example, a TOF-MS is over 1000 times more sensitive than the Cassini INMS (ten times from ion source efficiency and 100 times from better duty cycle). Also for the gas inlet system and the gas enrichment system there is plenty of heritage from previous missions, again the Galileo Probe mass spectrometer system, the Huygens GCMS, or more recently the mass spectrometer experiments on Philae, the Rosetta lander. The GSES, as part of the MASPEX instrument, has been selected to fly aboard the NASA mission Europa-Clipper with a launch date scheduled in 2022.

During phase A, a trade study will be conducted where the selected solution of having a high-sensitivity mass spectrometer with medium mass resolution together with a TDS instrument for selected isotope measurements will be compared to a single sensitive high-resolution mass spectrometer. The latter would allow all measurements to be performed with a single instrument, at the price of increased complexity of the instrument.

D.2.8 Critical Issues: None

D.3 *Hera* Atmospheric Structure Instrument

D.3.1 Investigation Overview

The *Hera* Atmospheric Structure Instrument (*Hera*-ASI) will make *in situ* measurements during entry and descent into the Saturn's atmosphere in order to investigate the atmospheric structure, dynamics, and electricity. The scientific objectives of the *Hera*-ASI are to determine the atmospheric profiles of pressure and temperature, the evaluation of the density and mean molecular weight profile along the Probe trajectory and the investigation of the atmospheric electricity (e.g. lightning) by *in situ* measurements. *Hera*-ASI data will also contribute to the analysis of the atmospheric composition. Moreover *Hera*-ASI will have a primary engineering function by establishing the entry trajectory and the probe altitude and vertical velocity for correlating all Probe experiment data and to support the analysis of the Radio Science / Doppler Wind Experiment (DWE).

D.3.1.1 Atmospheric Structure and Stability

In situ measurements are essential for the investigation of the atmospheric structure and dynamics. *Hera* ASI will measure the atmospheric state (P, T and density) as well as constraining atmospheric stability, dynamics and its effect on atmospheric chemistry.

The determination of the lapse rate can be used to identify the location of condensation and eventually clouds, and to distinguish between saturated and unsaturated, stable and conditionally stable regions. The variations in the density, pressure and temperature profiles provide information on the atmospheric stability and stratification, on the presence of winds, thermal tides, waves and turbulence in the atmosphere.

D.3.1.2 Atmospheric Electricity

Hera ASI will measure unknown properties of Saturn lightning, determine the conductivity profile of the Saturnian troposphere, and detect the atmospheric DC electric field.

It is well known that 2000-km sized atmospheric storm systems on Saturn produce superbolt-like lightning discharges with energies up to 10^{13} J. To date the strong Saturn lightning radio emissions have only been measured from outside Saturn's ionosphere, i.e. mostly at frequencies >1 MHz and occasionally down to a few hundred kHz. The *Hera* Atmospheric Structure Instrument will measure the unknown lightning spectrum in the frequency range of ~1-200 kHz, and will obtain burst waveforms with different temporal resolutions and durations. A Saturn lightning flash typically lasts ~100 ms and consists of many sub-discharges of the order of 0.1 ms, so waveforms over 100 ms with 0.1 ms resolution for the full flash and waveforms over 0.5 ms with 2μs resolution for the sub-strokes would be a sensible choice. The latter requires a sampling frequency of 500 kHz, which is also sufficient for obtaining the spectrum up to 200 kHz.

Atmospheric conductivity and the DC electric field are important basic parameters of atmospheric electricity which provide indirect information about galactic cosmic ray ionization, aerosol charging inside and outside of clouds, properties of potential Schumann resonances and so on.

D.3.2 Measurement Principle

The key *in situ* measurements will be atmospheric density, pressure and temperature profile by measuring deceleration of the entry vehicle and performing direct temperature and pressure measurements during the descent phase [*74*,*104*]. Densities will be determined using measurements of the deceleration of the probe during entry. The flight profile of the probe,

including variations in speed and angle of attack provide information regarding turbulence and vertical motions. Once the probe heat shield is jettisoned, direct measurements of pressure, temperature and electrical properties will be performed. *Hera* ASI will monitor the acceleration experienced by the probe during the whole entry and descent phase and will provide the unique direct measurements of pressure, temperature, conductivity, and DC electric field through sensors having access to the atmospheric flow.

D.3.3 Design Description / Operating Principle

The *Hera* Atmospheric Structure Instrument (ASI) consists of several sensors both internal and external to the pressure vessel, and operates during high speed entry in the upper atmosphere and in descent when the probe is subsonic. The proposed instrument design leverages strongly from the Huygens ASI experiment of the Cassini/Huygens mission [*105*] and the Galileo and Pioneer Venus ASI instruments [*106*, *107*]. The *Hera* ASI consists of four primary sensor packages: (1) a three axis accelerometer (ASI-ACC), (2) a pressure profile instrument (ASI-PPI), (3) temperature sensors (ASI-TEM) and (4) an Atmospheric Electricity Package (ASI-AEP).

The ASI-ACC will start to operate prior to the beginning of the entry phase, sensing the atmospheric drag experienced by the entry vehicle. Direct pressure and temperature measurement will be performed by the sensors having access to the atmospheric flow from the earliest portion of the descent until the end of the probe mission at approximately 10 bars. AEP will measure the atmospheric conductivity and DC electric field in order to investigate the atmospheric electricity and detecting lighting.

D.3.3.1 Accelerometers

The ACC package should be placed as close as possible to the center of mass of the entry vehicle. It consists of 3-axis accelerometers. The main sensor is a highly sensitive servo accelerometer aligned along the symmetry (spin) axis of the Probe, with a resolution of 10^{-5} to 10^{-4} m/s^2 (depending on the resolution setting) with an accuracy of 1%. Accelerations can be measured in the 0-200 g range (where g is the Earth's acceleration of gravity). This sensor is the most sensitive accelerometer ever flown in a planetary entry probe [*108*]. Having a triaxial accelerometer (namely one sensor located along each probe axis) will allow for an accurate reconstruction of the trajectory and attitude of the probe, and to sense the atmospheric drag in order to derive the atmospheric density profile. Assuming the HASI ACC Servo performance at Titan, a noise performance of some 0.3 μg is expected. The exact performance achievable, in terms of the accuracy of the derived atmospheric density, will also depend on the probe ballistic coefficients, entry speed and drag coefficient, all of which will differ somewhat from the Titan case.

D.3.3.2 Temperature Sensors

The ASI-TEM utilizes platinum resistance thermometers to measure the kinetic temperature during the descent just as in the Huygens Probe ASI and Galileo probe. Two thermometers are exposed to the atmospheric flow and effectively thermally isolated from the support structure. Each thermometer includes two redundant sensing elements: the primary sensor (FINE) directly exposed to the airflow and a secondary sensor embedded into the supporting frame with the purpose to be used as spare unit in case of damage of the primary. The principle of measurement is based on the variation of the resistance of the metallic wire with temperature. The reading of the thermometer is made by resistance comparison with a reference resistor, powered by a pulsed current.

TEM has been designed in order to have a good thermal coupling between the sensor and the atmosphere and to achieve high accuracy and resolution. Over the temperature range of 60-360 K these sensors maintain an accuracy of 0.1 K with a resolution of 0.02 K.

D.3.3.3 Pressure Profile Instrument

The ASI-PPI will measure the pressure during the entire descent with an accuracy of 1% and a resolution of 1 micro bar. The atmospheric flow is conveyed through a Kiel probe inside the Probe where the transducers and related electronic are located.

The transducers are silicon capacitive sensors with pressure dependant dielectricum. The pressure sensor contains as dielectricum a small vacuum chamber between the two electrode plates, where the external pressure defines the distance of these plates. Detectors with diaphragms of different pressure sensitivity will be utilized to cover the pressure range to ~10 bar. The pressure is derived as a frequency measurement (within 3-20 kHz range) and the measurements is internally compensate for thermal and radiation influences.

D.3.3.4 Atmospheric Electricity Package

The ASI-AEP consists of sensors and a signal processing unit. Since Saturn lightning is very intense and localized, lightning discharges should be detectable by a short electric monopole, dipole loop antenna from distance of several thousands of kilometers. The conductivity of the atmosphere can be measured with a mutual impedance probe. A current pulse is sent through the surrounding medium and the resulting voltage is measured by two passive electrodes, from which the impedance of the medium can be determined. This can be corroborated by determining the discharge time (relaxation) of two charged electrodes. After the discharge, the natural DC electric field around the probe can also be measured with them. The signal processing unit (to be accomodated into the ASI main central unit) will manage to amplify the signals, extract waveforms of bursts with different durations and temporal resolutions, perform spectral analysis at various frequency ranges (1-200 kHz or in the TLF - Tremendously Low Frequency below 3 Hz to detect Schumann resonances), and to provide active pulses and sensor potential control to handle the conductivity and DC electric field measurements.

D.3.3.5 Data Processing Unit (DPU)

The control, sampling and data management of the ASI sensors is handled by a central Data Processing Unit including the main electronics for the power supply and conditioning, input/output and sensor control. The ASI-DPU interfaces directly to the entry probe processor.

D.3.4 Design Description / Operating Principle

The required resources of the *Hera*-ASI are based on estimates made from the heritage of the Huygens Atmospheric Structure Instrument.

- **Mass**: ~2.5 kg (including sensors, electronics, and supporting structure/boom);
- **Volume:** ~20 x 20 x 20 cm^3 (distributed, including DPU);
- **Data Rate:** 250 bps (without compression)
- **Power:** ~10 watts

It is expected that the performance and requirements will be improved based on experience from the Huygens ASI, in terms of sensor design, packaging, and mounting, as well as the benefit of nearly two decades of technological improvements in sensor technology.

D.3.5 Specific/Critical Interface Requirements & Environment Constraints

The accelerometer packaging should be mounted as close as possible to the Probe's center of mass. The TEM temperature sensors and the PPI pressure Kiel inlet should be mounted onto a fixed external boom ensuring that the sensors are outside of the probe boundary layer. Electric sensors should be accommodated on a boom in order to measure the DC electric field in vertical direction. EMC requirements and ESD protection have to be taken into account.

Heat shield Thermal Protection System (TPS) sensors, like those for MSL MEDLI and ESA ExoMars, will provide important data on TPS mass loss and heat shield dynamics during entry. These type of measurements proved to be critical for the Galileo entry probe [*109*].

D.3.6 Specific Calibration Requirements

Pre-flight: static and dynamical calibration will be performed at sensor, subsystem and instrument integrated level. Stratospheric balloon drop test experiments with the ASI package could be useful in order to assess sensors performance and to validate data retrieval methods.

In flight: during cruise phase CheckOuts (CO) will be regularly performed, ASI sensor performance will be monitored in order to check any drift due to aging or any degradation. Specifically on *Huygens*, in-flight data have been used in order to monitor the offset at zero g of the ACC sensor and estimate the long-term stability in the zero offset [*108*].

D.3.7 TRL Assessement & Relevant Heritage

Each *Hera*-ASI component has strong application heritage tracking back through Pioneer Venus, and Galileo ASI instruments [*110*, *111*] and Huygens ASI experiment of the Cassini/Huygens mission [*105*].

The Huygens ASI ACC main servo sensor is the most sensitive accelerometer ever flown in a planetary entry probe [*108*]. Having a triaxial accelerometer (namely one sensor located along each probe axis) will allow for an accurate reconstruction of the trajectory and attitude of the probe, and to sense the atmospheric drag in order to derive the atmospheric density profile.

The TEM utilizes platinum resistance thermometers just as in the Huygens Probe ASI, and Galileo and Pioneer Venus probes. The

proposed type of the pressure sensors, other than being successfully flown as part of HASI on board the Huygens probe, have been flown onboard for the NASA's Mars Phoenix 2007 mission and Mars Science Laboratory (MSL) and are part of the meteorological package of ESA's ExoMars 2016 Schiaparelli (DREAMS) and NASA's Mars 2020 rover (MEDA).

The Galileo Probe LRD (Lightning and Radio emission Detector) used a ferrite-core RF antenna and two photodiodes behind lenses to measure magnetic field pulses and optical emissions of lightning. Since Saturn lightning storms are quite localized (e.g. in the storm alleys at ±35° latitude) and might not be present all the time, we prefer not to use an optical detector, but rather employ an instrument design similar to the Huygens Probe HASI- PWA (Permittivity, Waves and Altimetry) Analyzer [*110*] including measurements of atmospheric electrical conductivity and the DC electric field.

In the *Hera* ASI design, existing flight-proven or commercial, off-the-shelf (COTS) hardware is applied in proven processes and applications. Other possible sensors types/candidates could be evaluated during the Phase A, but all of the components in the *Hera* ASI are at TRL higher than 6.

D.3.8 Critical Issues: None

D.4 *Hera* Net Flux Radiometer Experiment

D.4.1 Investigation Overview

Two notable instruments have flown in the past namely, the Large Probe Infrared Radiometer (LIR) [*111*] on the Venus Probe, and the Net Flux Radiometer (NFR) on the Galileo Probe [*112*] for in-situ measurements within Venus and Jupiter's atmospheres, respectively. Both instruments were designed to measure the net radiation flux and upward radiation flux within their respective atmospheres as the Probe descended by parachute. The NASA GSFC NFR, Figure D.2, builds on the lessons learned from the Galileo Probe NFR experiment and is designed to establish the net radiation flux within Saturn's atmosphere. The nominal measurement regime for the NFR extends from the tropopause at about 0.1 bar to at least 10 bars, corresponding to an altitude range of ~79 km above the 1 bar level to ~186 km below it. These measurements will help to define sources and sinks of planetary radiation, regions of solar energy deposition, and provide constraints on atmospheric composition, dynamics and cloud layers.

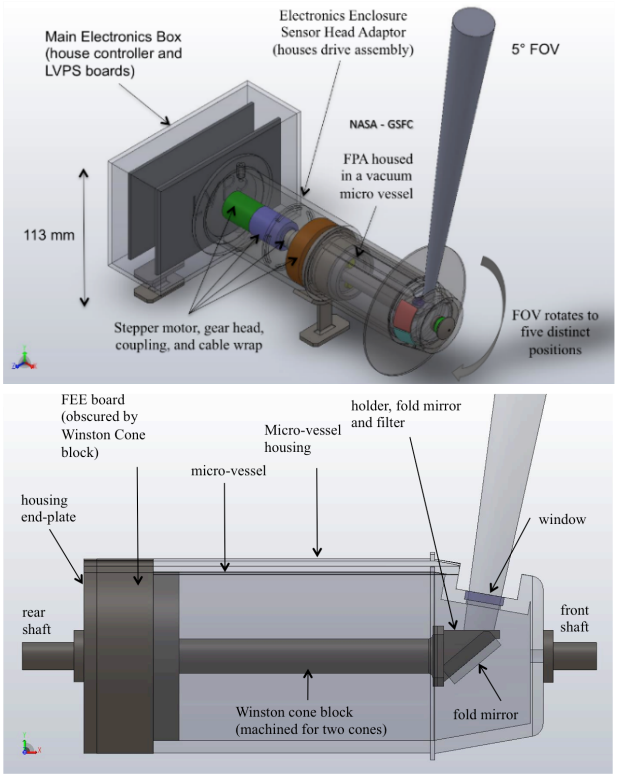

Figure D.2 *Top : NFR instrument concept showing a 5° field-of-view that can be rotated by a stepper motor into five distinct look angles. Bottom : vacuum micro-vessel that houses the FPA – this is essential to the NFR survival since the probe will be unpressurized. Rotation is about the axis of the shaft and is accommodated via bearings on front and rear shafts (NASA GSFC).*

Measurement Objective: The primary objective of the NFR is to measure upward and downward radiative fluxes to determine the radiative heating (cooling) component of the atmospheric energy budget, determine total atmospheric opacity, identify the location of cloud layers and opacities, and identify key atmospheric absorbers such as methane, ammonia, and water vapor. The NFR measures upward and downward flux densities in two spectral channels, the specific objectives of each channel are:

Channel 1 (Solar): 0.4-to-5µm spectral range. Net flux measurements will determine the solar energy deposition profile; upward flux measurements will yield information about cloud particle absorption and scattering;

Channel 2 (Thermal): 4-to-50µm spectral range. Net flux measurements will define sources and sinks of planetary radiation. When used with calculations of gas opacity effects, these observations will define the thermal opacity of particles.

D.4.2 Measurement Principle

The NFR measures upward and downward radiation flux in a 5° field-of-view at five distinct look angles, i.e., ±80°, ±45°, and 0°, relative to zenith/nadir. The radiance is sampled at each angle approximately once every ~ 2s.

The NFR Focal Plane Assembly (FPA), Figure D.3, comprises a set of bandpass filters, folding mirrors, non-imaging Winston cone concentrators, and radiation hard uncooled thermopile detectors housed in a windowed vacuum micro-vessel that is rotated to the look angle by a stepper motor. NASA GSFC has been working on this approach to develop a Saturn Probe NFR for several years and has extensive experience with the detectors and electronics.

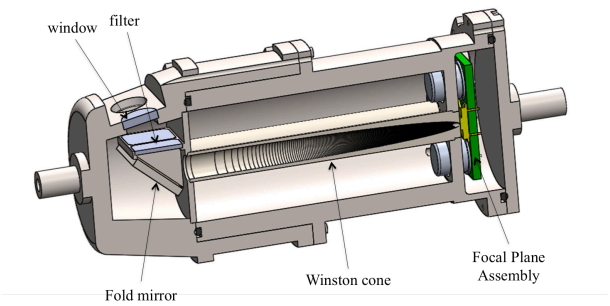

Figure D.3 *NFR Focal Plane Assembly housed in the vacuum micro-vessel showing construction of Winston cones to limit FOV in each channel (NASA GSFC).*

Assuming a thermopile voltage responsivity of 295 V/W, an optical efficiency of 50%, a detector noise of 18 nV/√Hz and an ASIC input referred noise of 50 nV/√Hz with 12-bit digitization gives a system signal-to-noise ratio of 300 to 470 in the solar spectral channel and 100 to 12800 in the thermal spectral channel for atmospheric temperature and pressure ranges encountered in the descent, i.e., 80 to 300 K and 0.1 to 10 bar respectively.

D.4.3 Design Description / Operating Principle

A physical and functional block diagram of the NFR is shown in Figure D.4. The focal plane consists of four single pixel thermopile detectors (solar, thermal and two dark channels), bandpass filters and Winston concentrators. The Front End Electronics (FEE) readout, Figure D.5, uses a custom radiation-hardened-by-design mixed-signal ASIC for operation with immunity to 174 MeV-cm2/mg single event latch-up and 50 Mrad (Si) total ionizing dose [*113*]. The ASIC has sixteen low-noise chopper stabilized amplifier channels that have configurable gain/filtering and two temperature sensor channels that multiplex into an on-chip 16-bit sigma-delta analog-digital converter (SDADC). The ASIC uses a single input clock (~1.0 MHz) to generate all on-chip control signals such as the chopper/decimation clocks and integrator time constants. The ASIC also contains a radiation tolerant 16-bit 20 MHz Nyquist ADC for general-purpose instrumentation needs.

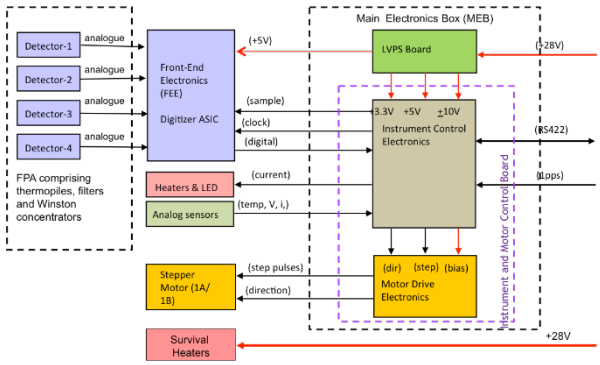

Figure D.4 *Block diagram of the NFR showing the major subsystems and Probe interfaces. The redundant features are not shown (NASA GSFC).*

The Main Electronic Box (MEB) is a redundant electrical system for science and housekeeping telemetry and thermal sensing and control. The two main elements of the MEB are the instrument and motor control board (comprising the instrument control and the motor drive electronics) and the Low Voltage Power Supply (LVPS) board.

The instrument control electronics uses a radiation hard µ-processor (e.g., Intersil HS-80C85RH) to perform the following functions: (i) receive and process the serial digitized data from the thermopile channels as well as provide a master clock and tagged encoded commands to the ASIC command decoders via a single line; (ii) mathematical operations on the science data such as averaging or offset corrections; (iii) data reduction, packetization, and routing of the science and housekeeping data to the Probe via a RS422 protocol; (iv) receive and act upon commands received from the Probe, e.g., active channel selection, setting temperature levels, or motor positions; (v) control stepper motor positions as well as decode their respective positions; (vi) provide stable temperature control to the instrument; and (vii) collect all temperatures and supply and reference voltages to form housekeeping/time stamped header packets that are

streamlined into the data output to the Probe. All timing functions are synchronized with a 1 pulse per second (PPS) square wave from the Probe. The LVPS board accommodates DC-DC convertors and other various voltage/current control devices. This board not only conditions and regulates the voltages for various electronic usage but also controls power to the heaters. The Probe +28 VDC bus voltage is filtered and dropped via DC-DC switch mode converter to two main voltages: +3.3 VDC for logic use and +5 VDC for the stepper motor.

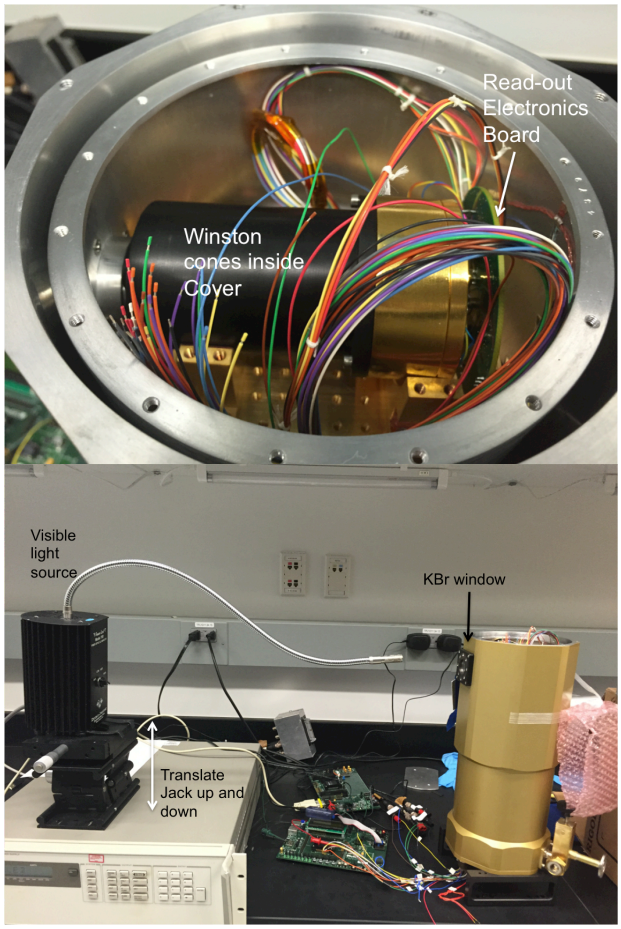

Figure D.5 *Top: NFR detector FPA being fit checked inside a liquid N_2 dewar for cold testing. The FPA ASIC read-out electronics is controlled by a "flight like" Pro-ASIC FPGA board. Bottom: set-up for measuring detector FOV response through electronic chain (NASA GSFC).*

D.4.4 Volume, Mass, Power, Data Rate

- **Mass:** ~2.4 kg (incl. harness);
- **Volume:** ~113mm x 144 mm x 279 mm;
- **Power:** ~5 W;
- **Data Rate:** ~55 bps (average);
- **Data Volume:** ~297 Kbits (90-minutes).

D.4.5 Volume, Mass, Power, Data Rate

The NFR will be mechanically mounted using thermally isolating mounts onto the Probe deck so accurate knowledge of the deck temperature, to better than ±1K, is required. An additional +28 VDC supply is needed for survival heaters that are controlled from the Probe.

The power-on for thermal control of the instrument must also be carefully considered prior to deploying the Probe from the carrier relay spacecraft. The heaters may require turning on at least 36-48 hours prior to the start of the probe descent science collection. Once the parachute is deployed at the top of the atmosphere, the descent latitude/longitude should be known to ±0.1°, the drop and spin rate should be known to ±0.1m/s.

D.4.6 Specific Calibration Needs

Prior to launch, the NFR will be radiometrically calibrated, in a thermal-vacuum chamber that simulates the environmental conditions at Saturn to establish both offset and gain uncertainties as a function of temperature. The gain uncertainity during descent is calibrated and removed by performing views of on-board hot and cold calibration targets as the instrument cycles sequentially through the look angles.

D.4.7 TRL and Relevant Heritage

The TRL level for all components and subsystems in the NFR is greater than 6. NASA GSFC has decades of experience managing, designing and delivering planetary mission instruments like the NFR.

D.4.8 Critical Issues: None

D.5 *Hera* Probe Nephelometer

D.5.1 Investigation Overview

Knowing the micro- and macro-physical properties of the haze and cloud particles in Saturn's atmosphere is crucial for understanding the chemical, thermodynamic and radiative processes that take place. Full characterization of the various types of haze and cloud particles requires in-situ instrumentation, because Saturn's stratospheric hazes obscure the lower atmosphere, and because remote-sensing measurements of, for example, reflected sunlight depend on myriads of atmospheric parameters thus prohibiting reaching unique solutions. The *Hera* Nephelometer (NEPH) will sample haze and cloud particles, illuminates

them, and measures the flux and degree of linear polarization of the light that is scattered in a number of directions. The particle properties can be derived from the dependence of the scattered flux and polarization on both the scattering angle and the wavelength.

Measurement Objectives: NEPH's primary objective is to characterize the micro- and macro-physical properties of atmospheric particles by measuring the flux and polarization of light that is scattered by aerosols that are passively sampled along the probe's descent trajectory. The angular and spectral distribution of the flux and polarization of the scattered light provides the particles' size distribution, composition, and shape, as well as their number density. NEPH's secondary objective is to measure the flux and polarization of diffuse sunlight in the atmosphere. This will provide the optical depth along the trajectory and its spectral variation, placing the results on the samples into a broad perspective. Combining NEPH's results with ambient pressure measurements from the ASI (Sect. 3), the absolute vertical profile of the hazes and clouds along the probe's descent trajectory can be determined.

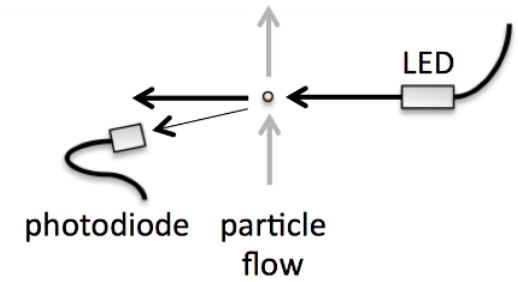

Figure D.6 *Side-view of LOAC's design, with the particles crossing the LED light beam from below. The photodiode at a scattering angle Θ=12° captures the forward scattered light.*

D.5.2 Measurement Principles

NEPH consists of two modules: LOAC (Light Optical Aerosol Counter) to measure the size distribution of particles, and PAVO (Polarimetric Aerosol Versatile Observatory) to measure particle shape and composition. The modules will be placed side by side to sample similar particles. The probe's descent through the atmosphere allows LOAC and PAVO to sample particles passively. The low solar flux levels in Saturn's atmosphere require both LOAC and PAVO to use artificial light sources for illuminating their samples.

Figure D.6 shows a schematic of LOAC. Sampled particles cross a 2-mm diameter LED light-beam and the flux F of the light that is scattered by a single particle across angle $\mathbf{\Theta} = 12°$ is measured. This flux F is very sensitive to the particle size, but relatively insensitive to its shape and/or composition. LOAC can accurately retrieve particle sizes between 0.1 and 250 mm in 20 size classes.

Figure D.7 shows PAVO's design. PAVO measures flux F as well as degree P and angle χ of linear polarization [*114*] of light that is scattered by sampled particles at 9 angles Θ: 12° (the same as for LOAC), 30°, 50° 70°, 90°, 110°, 130°, 150°, 170°. At each Θ, a small optical head (without moving elements) translates the scattered light into two modulated flux spectra F_M:

$$F_M(\Theta, \lambda) = 0.5\, F(\Theta, \lambda)\, [\, 1 \pm P(\Theta, \lambda) \cos \psi],$$

where $\psi(\Theta,\lambda) = 2\chi(\Theta,\lambda) + 2\pi\delta/\lambda$, with λ the wavelength and δ the retardance of the optical retarder in the head [*115*, also Keller and Snik, patent application WO2014/111487 A1]. The ± sign in the equation represents the beam-splitter in each head that produces two modulated flux spectra at every Θ that are subsequently fed to the spectrograph and detector with an optical fibre. Each modulated spectrum provides P and χ, while the sum of two spectra yields F. PAVO uses LEDs covering 400 to 800 nm to illuminate its sampled particles.

An extra optical head at Θ=0° monitors variations of non-scattered LED-light to obtain information on the number of particles. By chopping the incident beam, we will be able to derive the local diffuse solar radiation field. Another, outward pointing optical head could be added to directly measure the diffuse solar flux and its polarization state.

From the modulated spectra F_M the scattered fluxes F can be derived with a few nm resolution, and P and χ with 10-20 nm resolution. The required accuracy for P is 0.005 (0.5%), well within the modulation technique's accuracy [*116*].

D.5.3 Volume, Mass, Power, Data Rate

Table D.2 Specifications of the Nephelometer

	Mass	Power	Data Rate
LOAC	0.3 kg	1 watt	50 bps
PAVO	2 kg	2 watt	100 bps (10 optical heads)

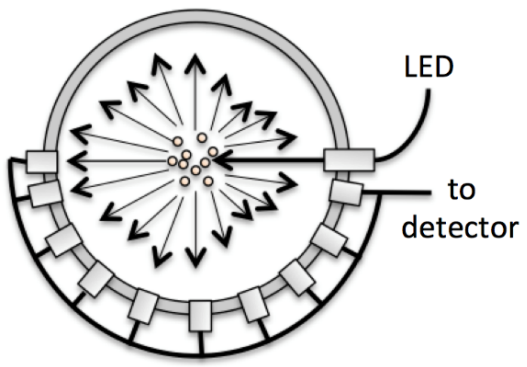

Figure D.7 *Top-view of PAVO. One optical head captures non-scattered LED-light, and 9 heads capture scattered light. Fibres lead the modulated flux spectra from each head to the detector.*

The data rate of PAVO increases linearly with the number of optical heads. On-board data processing will keep the data rate low (instead of transmitting the high-spectral resolution, modulated flux spectra, low resolution continuum flux and polarization data will be transmitted). The mentioned data rates assume continuous measurements. The total data transmission of NEPH will be optimized with the desired vertical resolution and the probe's data rate.

D.5.4 Specific/Critical Interface Requirements

The nephelometer should be able to sample atmospheric particles and should therefore be located on the outside of the payload, preferably on the lowest part of the probe, to avoid any biasing of the samples due to the flow around the probe.

D.5.5 Specific Calibration Requirements

LOAC includes a stray-light correction system to remove diffuse solar flux. The stability of its LED should be characterized pre-launch. PAVO has no requirement on the shape of the LED-spectrum, although it should be known in order to derive the absolute scattered flux F. The flux (and polarization) spectrum of the LED will be calibrated before sampling particles, using the dedicated optical head at Θ=0°. The components in the optical heads can be chosen such that their temperature sensitivity is minimal [*115*] and will be calibrated before launch (this calibration can be compared against the in-flight calibration of the 0°-head). The scattered and non-scattered LED-light can be distinguished from diffuse sunlight by chopping the incident beam through switching it on and off. The sensitivity of the LED output to this chopping will be determined before launch. Note that P and χ are independent of the incident LED-spectrum.

D.5.6 TRL and Relevant Heritage

LOAC's design is based on an instrument already in use as a balloon payload for aerosol size determination in the Earth's atmosphere [*117*, *118*]. PAVO's optical design is based on the SPEX instrument [*116*] that is used on the ground to measure aerosol properties. The SPEX-optics has been tested successfully for radiation hardness with view of ESA's JUICE mission. A design similar to PAVO's (except for the polarimetric optical heads) is the nephelometer on the Galileo probe [*119*].

D.5.7 Critical Issues: None

D.6 *Hera* Probe Radio Science Experiment

D.6.1 Investigation Overview

The *Hera* Probe Radio Science Experiment will comprise two main elements. Radio tracking of the *Hera* probe from the Carrier Relay Spacecraft (CRSC) while *Hera* is under parachute will utilize the resulting Doppler shift and provide a vertical profile of zonal winds along the descent path for the duration of the probe telecommunications link detectability to at least ten bars [*120*, *121*, *122*]. The possibility for a measurement of the second horizontal component of the winds via a probe signal frequency measurement on Earth when the probe descends on the sub-solar side of Saturn [*123*, *124*] will be carefully explored. The Radio Science/Doppler Wind Experiment (DWE) utilizes the *Hera* radio subsystem, knowledge of the *Hera* probe descent location, descent speed, altitude profile, and the CRSC trajectory to make a precise determination of the probe speed relative to the CRSC from which the zonal wind drift can be extracted. Additionally, as the *Hera* probe is expected to drift by up to several degrees in longitude under the influence of the zonal winds, the reconstruction of the probe descent location will provide an improved geographical context for other probe science investigations.

Additionally, the Radio Science/Atmospheric Absorption Experiment (AAbs) will utilize the Hera radio subsystem mounted on the CRSC to monitor the signal strength of the probe signal, providing a measurement of the integrated atmospheric absorption along the signal propagation path. The Galileo probe used this technique at Jupiter to strongly constrain the atmospheric NH_3 profile,

complementing the atmospheric composition measurements of the probe Mass Spectrometer [*125*].

The primary objectives of the *Hera* Probe Radio Science Experiment are therefore to 1) use the probe radio subsystem with elements mounted on both the probe and the CRSC to measure the vertical profile of zonal winds along the probe descent path with an accuracy of better than 1.0 m/s, and 2) to measure the integrated profile of atmospheric absorption, expected to be primarily due to NH_3 between the probe and CRSC. Secondary objectives include the analysis of Doppler modulations and frequency residuals to detect, locate, and characterize regions of atmospheric turbulence, convection, wind shear, and to provide evidence for and characterize atmospheric waves. From measurements of the probe relay signal strength, the effect of refractive-index fluctuations in Saturn's atmosphere including scintillations and atmospheric turbulence can be characterized. [*73*, *125*].

D.6.2 Measurement Principle

The *Hera* Transmitter UltraStable Oscillator (TUSO) will generate a stable signal for the probe radio link. The receiver USO (RUSO) will provide a time base from which very accurate measurements of the probe link frequency can be made. Knowledge of the probe descent speed and the CRSC trajectory will allow the retrieval of Doppler residuals due to unresolved probe motions including wind. While in terminal descent beneath the parachute, the vertical resolution of the zonal wind measurements will depend upon the probe descent speed [*126*]. In the upper atmosphere the vertical resolution will be on the order of 7 km, while in the deeper atmosphere variations with a vertical scale size on the order of one km can be detected. The accuracy of the wind measurement will primarily be limited by the reconstruction accuracy of the Hera probe descent location and the CRSC trajectory, the stabilities of the TUSO and RUSO, and the relative geometry of the *Hera* and CRSC spacecraft. Assuming a UHF link frequency, a wind measurement accuracy better than 0.2 m/s is expected. [*73*, *127*].

D.6.3 Design Description / Operation Principle

The *Hera* probe telecommunications system will consist of the relay radio transmitter subsystem on the probe and the receiver subsystem on the CRSC. The carrier receiver will be capable of measuring the *Hera* telemetry frequency at a sampling rate of at least 10 samples per second with a measurement accuracy of 0.1 Hz in frequency. The signal strength will be measured with a sample rate of 20 Hz and a signal strength resolution of .01 dBm [*125*]. This sampling rate will enable probe microdynamics such as probe spin and pendulum motion, atmospheric waves, aerodynamic buffeting and atmospheric turbulence at the probe location to be detected and measured.

The long-period stability of both the TUSO and RUSO, defined in terms of 30-minute fractional frequency drift, should be less than $\Delta f/f = 10^{-11}$, with an 100-second Allan Deviation of $\sim 10^{-13}$. The expected USO drift during a 90-minute probe descent is on the order of .01 Hz.

D.6.4 Volume, Mass, Power, Data Rate

- **Ultrastable Oscillator Mass:** ~1.5 kg;
- **Ultrastable Oscillator Power:** ~3 W steady state (higher during warmup);
- **Volume:** cylinder, ~4cm diam. x 14cm length;
- **Data Rate:** Very low. USO temperatures and voltages should be measured several times/minute with a corresponding data rate on the order of 2 bps. [*73*, *128*, *129*].

D.6.5 Specific/Critical Interface Requirements & Environment Constraints

To avoid spurious contributions to the Doppler profile from probe dynamics, the TUSO on the *Hera* probe should be mounted as close to the probe center of gravity as reasonably possible. Although the *Hera* and CRSC USO's will be contained within thermal ovens, the TUSO and RUSO temperatures should be maintained to better than ±1.0 K. A carefully considered warmup plan is necessary to assure adequate TUSO and RUSO frequency stability. Different USO types (e.g., Galileo probe quartz and Huygens probe Rubidium) require significantly different warmup times and steady state power requirements. [*73*, *128*, *129*]. The *Hera* probe link frequency and signal strength should be sampled by the relay receivers on the CRSC. Upon deployment of the parachute at the top of the atmosphere, the *Hera* descent latitude/longitude should be reconstructed to ±0.1deg, and the *Hera* descent speed based on ASI measurements of pressure and temperature should be known to ±0.1m/s. [*73*].

D.6.6 Specific Calibration Needs

The short-term frequency stability and long term aging of the TUSO and RUSO should be characterized prior to launch. In particular, the repeatability of the frequency drift profile over periods of 30 minutes to several hours should be carefully characterized. After launch, both the TUSO and RUSO should be powered on at least several times during cruise for calibration, and aging and drift characterization.

D.6.7 TRL and Relevant Heritage

There are two types of USO technologies with outer solar system entry probe heritage. The Galileo probe and orbiter carried SC-cut quartz crystal USOs, and the Huygens (Titan) probe and Cassini orbiter carried Rb USOs. The Galileo quartz crystal USOs provides a very stable frequency reference for short time periods, although the absolute frequency may be unknown to 100's of Hz, the changes in frequency were the observable of interest. The similarities between the Galileo Jupiter and *Hera* Saturn probe missions suggests that the crystal USO may be better for the planned Doppler Wind investigation, although further evaluation is needed. [*73*, *127*, *128*, *129*].

D.6.8 Critical Issues: None

Table D.3 Summary of Parameters for *Hera* Science Instruments

	Mass	Size	Power Rqmt	Data Rate	Data Volume
Hera Mass Spectrometer	16 kg	24.5 x 14.5 x 22.9 cm^3	~68W	~2 kb/s	10.7 Mbit
Hera Atmospheric Structure Inst.	2.5 kg	20 x 20 x 20 cm^3	~10W	~250 b/s	1.35 Mbit
Radio Science	1.5 kg	~4 cm diam x 14 cm length	~3W (warmup)	~2 b/s	10.8 kbit
Net Flux Radiometer	2.4 kg	11.3 x 14.4 x 27.9 cm^3	~6.3W (peak) ~4.7W (basic)	~55 b/s	297 kbit
Nephelometer	2.3 kg		~3W	~150 b/s	810 kbit

E. PROPOSED MISSION CONFIGURATION AND PROFILE

E.1. Science Mission Profile

The Saturn probe science mission is a relatively short phase (similar to Huygens) at the end of a relatively long transfer from Earth to Saturn (but shorter than *Rosetta's* transfer). To provide context for the science mission this section first gives an ordered timeline of all the flight phases of the mission, followed by more detailed discussions of the phases central to delivering the science results.

E.1.1 End-To-End Mission Profile

The Saturn probe mission begins its flight phase as an element of a NASA Saturn mission (likely a NASA New Frontiers 4 (NF4) mission) launch to place both the NASA spacecraft (called here the Carrier Relay Spacecraft: CRSC). The CRSC will carry and deliver Hera to Saturn and provide the radio relay function during Hera's descent in Satrn's atmosphere. The launch epoch of a NASA NF4 mission to Saturn being scheduled in 2024-2025, this requires the accelerated development of the Hera probe if this proposed joint scenario is selected. Alternatively, Hera could be carried aboard a flagship mission part of the NASA ROW program, with a launch date in the late 20's, which would allow to develop Hera following the nominal M5 schedule. In the rest of the document the NF4 schedule is assumed for the CRSC. A thorough search for trajectories will be the responsibility of the NASA NF4 Saturn mission team; multiple options are expected to be available. For study purposes the *Hera* team has used a very common and somewhat generic trajectory that utilizes Venus and Earth gravity assists, and arrives at Saturn in August 2033 after a cruise phase of 8-9 years. Depending on the selected launch date and ΔV budget, various trajectories exist that could shorten the trip time by as much as a year. No CRSC science data acquisition affecting the Hera delivery and mission will be planned until Saturn approach. For the majority of the transfer, CRSC operations involving Hera are limited to system monitoring, maintenance, and periodic checkouts. During this period, the Hera power will derive from the CRSC power subsytem, possibly comprising solar panels and secondary batteries.

Several weeks prior to Saturn arrival, the NASA NF CRSC will turn to the proper probe release attitude and will release the *Hera* probe onto the probe's Saturn delivery trajectory, spinning the probe for attitude stability. The only *Hera* systems operating at this time are the batteries required for the probe to maintain proper subsystem temperatures and the coast timer. Hera will continue on a ballistic trajectory until reaching the entry interface point at ~1500 km above the Saturn 1-bar level. During and subsequent to the probe release event, the CRSC will be Doppler tracked from Earth to help characterize the release dynamics and improve knowledge of the *Hera* release trajectory. Following release of the *Hera* probe, the CRSC will perform navigation observations followed by a divert maneuver, placing the CRSC on a trajectory that will position it for the *Hera* data relay function. The timing of the *Hera* probe release will be selected to balance entry location uncertainty, CRSC divert ΔV, *Hera* battery capacity, and thermal considerations. These trades will be conducted with NASA during the assessment phase following NF4 Phase A selection.

The probe entry and descent sequence will begin a few hours before entry when the probe coast timer begins the "wake up" process, performing probe system health checks, and warming the probe's avionics and science instruments in preparation for data acquisition and return. Upon encountering the atmosphere, an aerodynamically stable aeroshell enclosing the probe's descent module (DM) will protect the DM from the extreme heat and dynamic forces of entry into Saturn's hydrogen-helium atmosphere at speeds between 26 and 30 km/s. By this time the CRSC has begun its ~90-minute overflight of the entry site, aiming the high gain antenna (HGA) with a UHF feed to receive data transmitted from the probe. After the hypersonic deceleration phase is completed a drogue parachute will remove the aft cover and extract the main parachute, which will then pull the probe out of the probe's aeroshell, at an altitude near Saturn's tropopause. The DM / main parachute system will have a signficantly smaller ballistic coefficient than the aeroshell, thereby ensuring reliable separation without the possibility of DM / aeroshell recontact.

The *Hera* probe will begin its science mission immediately after releasing the heatshield, as it descends into the troposphere's upper, colder, and less dense regions, and the *in situ* science instruments begin acquiring data. As the DM descends into denser atmosphere, the descent rate may be increased (at an altitude and via a method to be determined in future trade studies) to allow the DM to reach the required depth (nominally 10 bars level plus margin) during the CRSC overflight window. The DM transmits science data to the CRSC for as long as the probe-CRSC relay link

survives but to at least the 10 bars pressure level and likely to the 20-bar design margin level or deeper. Eventually the combination of increasing pressures and temperatures will cause the DM systems to fail, then to melt, and finally to vaporize as the DM becomes a new part of Saturn's atmosphere.

During the ~70-90 minute *Hera* descent, the overflying CRSC will maintain the data relay link with the DM, storing multiple copies of each channel of the probe's science data in redundant onboard storage media for later downlink to Earth. After the data reception window ends the CRSC turns its HGA to Earth, downlinks each copy multiple times, and then begins its NASA NF science mission.

E.1.2 Core Science Mission Profile

The Saturn probe's primary science mission closely resembles that of the *Galileo* probe, and has many similarities to ESA's *Huygens* probe that successfully entered and descended through Titan's atmosphere. After the pre-entry wake-up and warm-up period, the probe will begin acquiring science data when its accelerometers detect non-zero acceleration due to atmospheric drag. Until the aeroshell is jettisoned there is no data relay to the CRSC, although the possibility of transmitting critical event tones will be explored. The time-tagged accelerometer data and possibly engineering entry science (e.g., heat shield recession data), needed to reconstruct the vertical profile of atmospheric density, are stored in onboard memory on the DM. When the aeroshell is jettisoned and the probe is safely descending beneath parachute, the radio system begins transmitting data on two channels from the now-operating *in situ* instruments, along with the stored data from the entry and deceleration phase. There is no radio receiver on the DM, so no real-time commanding of the DM after release from the CRSC is possible. The CRSC uses the DM's radio signal, whose carrier frequency is controlled by an ultrastable oscillator (USO), to make Doppler Wind Experiment measurements during the descent, providing a measure of the vertical profile of zonal winds and atmospheric waves at the descent location. Using a command sequence loaded before release from the CRSC a simple controller on the DM runs a pre-programmed series of measurements by each instrument and routes the data for storage and transmission. The controller uses temperature and pressure data from the Atmospheric Structure Instrument (ASI) to determine atmospheric depth and guide instrument modes and observation timing, optimizing the data set for science objectives appropriate to the different pressure levels. When the DM reaches the 10-bar level in Saturn's atmosphere, the data return strategy has all probe science data successfully transmitted to the CRSC, satisfying mission success criteria. Subsequent data are returned as the pre-determined (and diminishing) relay data rate allows, according to the controller's priority protocol, until increasing temperatures and pressures cause the DM systems to fail. It is possible that beneath 10 bars, the composition experiment will enter an operational mode to focus primarily on measurements of water abundance, thereby better utilizing the diminishing probe telecom bandwidth.

Initial analyses indicate that with some approach trajectories matching the NF4 calendar and utilizing Venus and Earth gravity assists, the probe's entry location will be on the sunlit and Earth-facing side of Saturn, providing ~90 minutes of descent before crossing the evening terminator. This is very beneficial for two potential experiments. Sunlight intensity measurements by a visible-wavelength channel on the Net Flux Radiometer allow inferring the depth at which solar energy is deposited in Saturn's atmosphere, important in determining what drives Saturn's winds and the overall energy balance of the atmosphere. Receiving the DM's carrier frequency at Earth, possible only when the DM is on the Earth-facing side of Saturn, allows a second Doppler tracking measurement to be made at Earth. This second wind vector component will help separate the line-of-sight wind speed at the probe location into zonal, meridional, and vertical wind speeds.

E.1.3 Saturn Atmospheric Entry

Entry into Saturn's atmosphere from hyperbolic approach is a difficult but manageable task. The proposed mission is similar to the *Galileo Probe* mission that entered Jupiter's atmosphere successfully, deployed the descent probe and collected and transmitted a wealth of data. The *Galileo* probe entered Jupiter's hydrogen-helium atmosphere at 47.4 km/s, compared to the 26-30 km/s range of entry speeds for the Saturn probe mentioned in Section E.1.1, resulting in a Saturn entry that is significantly less challenging than that faced by *Galileo* at Jupiter. Figure E.1 shows the concept of operation for Galileo entry, deployment, and descent. The Saturn probe's entry and deceleration phase is very similar in most aspects to

that of the *Galileo* mission. A probe scaled from *Galileo's* 1.27 m diameter to 1.0 m, with an estimated entry mass of ~200 kg as compared to *Galileo's* 339 kg, can accomplish the required science at Saturn. **Table E.1 uses the *Galileo* equipment as a basis for subsystem masses for the Saturn probe, and indicates that an entry mass of ~200 kg is readily achievable.** More rigorous analysis should allow significant reductions in structure mass, since inertial load levels will be much lower than *Galileo's* design deceleration load of 350 g. Note that the mass of the hardware mounted on the CRSC is estimated to be 20-30 kg for the spin release mechanism and 10 kg for the electronics. Although the entry heating rate for a prograde Saturn entry is much less severe than *Galileo* experienced at Jupiter, Saturn's larger atmospheric scale height yields a long-duration entry resulting in a total heat load that is similar to the *Galileo* Jupiter entry.

High TRL ablative materials suitable for extreme entry missions and test facilities to qualify TPS for extreme environments are not yet available to ESA. Since the heritage Carbon Phenolic (HCP) used for the *Galileo* and *Pioneer-Venus* missions is no longer available, NASA's innovative Heat-shield for Extreme Entry Environment Technology (HEEET) now under development at NASA's Ames Research Center (ARC) provides a very efficient solution for such an entry profile, resulting in a Thermal Protection System (TPS) mass that is only a fraction of the *Galileo* entry system's TPS mass. According to the NF-4 draft AO, NASA guarantees this technology to be delivered at TRL 6 by September 2018. A selected NF-4 mission using this technology would be launched by December 2024. In this context, HEEET is an appropriate technology for a Saturn probe mission within the ESA-M5 call schedule and satisfies the maturity requirements stated in the call. The partnership in which NASA would be responsible for the design and construction of the TPS maximizes the value of ESA's investment in the Saturn probe mission. The proposed partnership with NASA leverages both the *Galileo* implementation experience and ongoing TPS technology development to enable the Saturn probe mission.

Note that ablative materials made in Europe and suitable for extreme entry missions are also available to ESA. Airbus Safran Launchers has developed the Sepcore concept [*130,131*], which is a three-layer sandwich structure adaptable to a specific mission profile. The core of the system is a high temperature resistant carbon-carbon or ceramic matrix composite structure onto which a thin ablative layer is fixed. The payload is protected from the hot structure by a lightweight insulator. This stack-up sequence allows to design the heatshield with only the strict necessary thickness of ablative material that will be charred. The thickness of ablative material used in conventional heatshields to soak up the extra heat is replaced here by a lightweight internal insulation. The Sepcore allows using high density carbon-phenolic while minimizing the mass of the heat shield. Technology demonstration (TRL 4) has been done under ESA TRP. Despite its TRL lower than the NASA ARC HEEET material, the development of this European technology should be assessed especially in case the launch with a NASA flagship ROW mission would be considered.

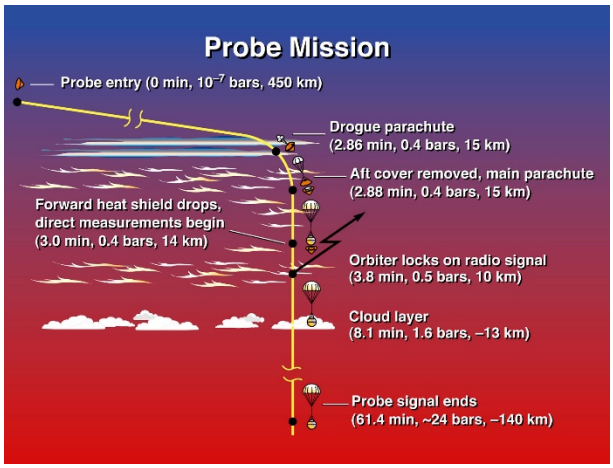

Figure E.1 *Galileo entry, descent and deployment sequence shown above will be the basis for the proposed Saturn mission.*

Entry velocity and entry flight path angle (EFPA) strongly influence the atmospheric entry challenge. Saturn's large planetary mass results in typical inertial entry speeds of 36 km/s or more, but during a prograde entry Saturn's high rotation rate mitigates up to 10 km/s of the entry speed, with the maximum benefit from a near-equatorial entry alignment. Steep EFPAs improve targeting accuracy and reduce the heat load but increase peak deceleration load, heating rate, and peak pressure. Mission success can be achieved with an entry latitude below 10° and EFPA between -8° and -19°. Table E.2 summarizes the range of entry conditions and associated TPS mass for relevant combinations of EFPA and latitude. For all cases, the HEEET material is significantly more mass efficient than the HCP used for *Galileo*. The benefit is most pronounced at the shallower entry angles, which also provides more benign inertial loads. For steeper EFPAs, the ablative TPS mass is further

reduced and is only 10% of the entry mass. In the study that follows, we primarily focus on the EFPA = -19° case, corresponding to a probe entry system mass of 200 kg.

Figure E.2 shows the stagnation point heat-flux and impact pressure along trajectories that are bounded by ±10° latitude (including equatorial) with EFPAs between -8° and -19°. Also shown in this figure are the conditions at which HEEET material has been tested in arc-jet and laser heating facilities. HEEET acreage material is very well behaved at these extreme conditions and at shear levels that are far greater than the anticipated Saturn entry conditions. Adoption of HEEET, in partnership with NASA and ARC, minimizes the TPS technology risk for this mission.

Table E.1 Entry System Mass Estimates

Entry Flight Path Angle (EFPA), degrees	-8		-19	
	Mass, kg			
TPS Material	**HEEET**	**Carbon Phenolic**	**HEEET**	**Carbon Phenolic**
Entry System (total mass)	215	255	199	223
Deceleration module	92.6	132.6	76.6	100.6
Forebody TPS (HEEET)	40	80	24	48
Afterbody TPS	10.5	10.5	10.5	10.5
Structure	18.3	18.3	18.3	18.3
Parachute	8.2	8.2	8.2	8.2
Separate Hardware	6.9	6.9	6.9	6.9
Harness	4.3	4.3	4.3	4.3
Thermal Control	4.4	4.4	4.4	4.4
Descent Module	122.7	122.7	122.7	122.7
Communication	13	13	13	13
C&DH Subsystem	18.4	18.4	18.4	18.4
Power Subsystem	22[1]	22[1]	22[1]	22[1]
Structure	30	30	30	30
Harness	9.1	9.1	9.1	9.1
Thermal Control	4.3	4.3	4.3	4.3
Science Instrument	25	25	25	25
Separate Hardware	0.9	0.9	0.9	0.9

Note. *Deceleration of (or Entry System) module 1m diameter aeroshell, 36 km/s inertial velocity, 10 deg latitude). The descent module mass estimate, except for the Science Instruments, are the same as that of Galileo Probe. Additional mass savings are likely when the descent system structure is adjusted for reduction in scale as well as entry g-load. Galileo design-to g-load was 350. Saturn probe entry g-load with 3-sigma excursions will be less than 150 g's.*

Table E.2 Entry g-loading, TPS mass comparison between HEEET and Carbon Phenolic, and recession mass loss for the limiting entry conditions (the inertial velocity corresponds to an entry velocity in the 26-30 km/s range)

	Inertial Velocity (km/s)	Geoc. Latitude	Entry FPA (deg)	Entry Mass (kg)	Ballistic Coeff., (kg/m^2)	Entry g-load (g's)	HEEET Mass (kg)	Carbon Phenolic Mass (kg)	Mass loss from Recession (kg)	TPS Mass loss/Entry Mass
1	36.0	10.0	-8.0	220	269	29	39.3	60.8	2.7	1.2%
2	36.0	10.0	-19.0	220	269	131	23.8	33.9	2.6	1.2%
3	36.0	0.0	-8.0	200	245	29	29.1	44.3	1.7	0.8%
4	36.0	0.0	-19.0	200	245	127	18.7	27.1	1.6	0.8%

[1] This calculation assumes probe release 30 days before entry and 4 W of thermal control, 50 W during 12 hours of warm-up and 100 W of science during the 2 hours of descent.

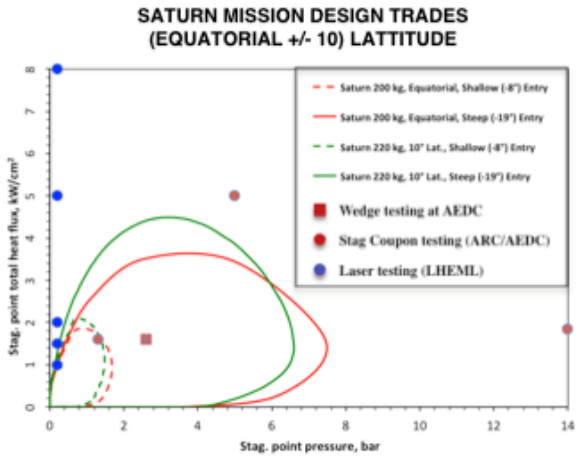

Figure E.2 *Heat-flux and pressure (stagnation values) along four trajectories that bound the proposed Saturn mission is shown above along with arc-jet test conditions where HEEET has been tested. The HEEET acreage material shows exceptional performance with no failure even at extreme conditions (@ 14 atm. and 2000 W/cm^2).*

E.1.4 Probe Delivery to the Entry Trajectory

Since the entry probe carries no propulsive capability it is on a ballistic trajectory from the moment of release, and the CRSC must turn to the proper attitude to ensure the probe is placed on the proper trajectory for Saturn arrival and entry. The probe also has no attitude control capability, so the CRSC must spin the probe at release to maintain its attitude until entry. After the long cruise from Earth to Saturn approach the first activities in preparation for release are navigation observations, leading to trajectory correction maneuvers (TCMs) to establish the proper Saturn entry trajectory. The sequence of maneuvers will depend on where in the NF mission timeline the Hera mission will occur. The CRSC will release the probe at a distance from Saturn that ensures the entry trajectory will be within tolerances, and might image the departing probe to verify release accuracy and decrease the uncertainty in the probe entry location. Soon after probe release, the CRSC performs a divert maneuver, changing the CRSC trajectory to a Saturn flyby that provides data relay for the entry probe. The precise timing of probe release is a trade involving navigation accuracy, which degrades with increasing distance from Saturn (earlier release and longer probe coast), the mass of batteries needed to keep the probe warm during its post-release coast, and the mass of propellant needed for the CRSC's divert maneuver, which increases with decreasing distance to Saturn (later release and shorter probe coast). Assessment phase studies will estimate the optimum timing of those first navigation activities and TCMs, and probe release.

E.1.5 Data Relay

The mission data return strategy uses the method of relaying the probe data through the Carrier spacecraft. Studies have shown that this approach yields higher data rates with less operations risk than the direct-to-Earth (DTE) approach [*132*] and carries other science benefits as well. Similar to the *Galileo* probe, after deploying from the entry aeroshell, the descent module transmits data over two independent channels (left and right circular polarization at slightly offset frequencies) through a UHF low-gain patch antenna (LGA) on the DM's upper surface. The CRSC trajectory is within the LGA beam from the start of the probe data transmission through the end of the descent module's mission, some 70-90 minutes later. The CRSC points its high-gain antenna (HGA) with UHF feed leading to a UHF receiver, at the probe entry site, receiving both channels of probe data and storing them onboard in multiple redundant copies. Extremely conservative link analyses based on an 8 W UHF transmitter suggest data rates of at least 500 bps per channel (the *Galileo* probe data rate was 128 bps per 25 W channel at L-band). More refined analysis indicates a variable data rate is feasible, with rates potentially greater than 10 kbps for part of the descent (D. Atkinson, private communication). Performance far greater than the *Galileo* probe's performance is enabled largely by two differences from the *Galileo* mission: Saturn's lack of intense radiation belts and their associated RF synchrotron radiation noise allows the Hera probe to use UHF, which is less attenuated by atmospheric ammonia and water; and the distance from the DM to the CRSC during data relay is on the order of 1 Saturn radii (60,000-80,000 km), much closer than the 4 Jupiter radii (200,000+ km) range of the *Galileo* relay.

After receiving all the probe data onboard, the CRSC downlinks the data to Earth via the ESA ESTRACK Network and/or NASA DSN. The CRSC will turn its HGA to Earth, transmitting multiple copies of each redundant telemetry data file packets at X-band until the CRSC primary battery charge is effectively exhausted. After recharging its secondary batteries, it then repeats those transmissions periodically as the battery charge allows, until ground commands verify the full data set has been successfully received. Any ancillary data, such as context imaging from a

CRSC imager, are included in this downlinked data set.

E.2 System Level Requirements

E.2.1 Entry Probe Requirements

Between release from the CRSC and atmospheric entry there are three primary requirements on the entry probe: 1) maintain orientation for entry; 2) maintain the probe subsystems and instruments within their environmental tolerances to ensure proper wake-up, warm-up, and operation during entry and descent; and 3) provide adequate timing so the "wake-up" sequence begins at the proper time. The CRSC orients the probe and spins it upon release for attitude stability, so the first requirement becomes a requirement on the probe's mass properties: its principle inertial axis must co-align with the aeroshell's symmetry axis. Maintaining environmental conditions is primarily keeping the DM warm at more than 9 AU. In the absence of radioisotope heater units, this will likely require primary batteries to power electric heaters. Batteries would also power an event timer of sufficient accuracy that the wake-up sequence is initiated in time to be completed before entry begins, but not so far in advance that it wastes battery power waiting for entry.

Atmospheric entry involves a different set of requirements. There is a new constraint on the probe's mass properties, along with its exterior geometry: the entire entry system (DM + aeroshell) must be aerodynamically stable at hypersonic speeds, and must maintain that stability in the face of ablative mass loss and changes in the entry probe cross-sectional geometry. The system must accommodate the extreme heating environment and potentially large inertial loads of atmospheric entry at 26-30 km/s. If the heat shield is instrumented, the heat shield sensor data must be stored onboard until the sensor and entry accelerometry data can be telemetered to the CRSC after DM deployment from the heat shield. After the end of the hypersonic deceleration phase the DM's controller must initiate a sequence of deployments, including drogue parachute mortar firing, backshell release and main parachute deployment, and heat shield release, for transition to the stable descent phase and primary science data acquisition.

When the DM stabilizes under its main parachute, its controller must initiate radio transmission of data to the CRSC, and operation of all science instruments. This continues to a depth determined by the controller using ASI data, when the descent rate must be increased to reach the required 10-bar depth before the CRSC's received signal falls below a margined SNR limit. Potential methods include releasing the main parachute and freefalling or opening a smaller parachute (as per *Huygens*), reefing the main parachute, or other options, all to be studied in the assessment phase. During this descent phase the DM must maintain its systems within their operating environmental ranges while exposed to external temperatures and pressures ranging from ~85 K at 0.1 bar (near the tropopause) to ~290 K at 10 bars, possibly increasing to ~350 K at 20 bars during an "extended mission."

Despite its fundamental nature and extreme importance to planetary science the data volume for the *Galileo Probe* mission was quite small, less than 1 Mbit. The threshold Saturn probe mission data volume will be of similar size. Studies suggest that data rates for the DM-to-CRSC link might support data volumes as high as several tens of Mbit, providing capacity for ancillary science investigations while retaining large margins. Because the link margin will change with depth, it is likely that the data rates from DM instruments will necessarily vary during the descent and some data will need to be stored on the DM prior to transmission. The size of onboard memory required will be studied in the assessment phase, but certainly will be less than the size of the entire data set, and devices with tens of Mbit capacity are small and require little power.

E.2.2 Carrier-Relay Spacecraft Requirements

The Saturn probe mission's CRSC is a fully capable spacecraft that supports the entry probe's mission with a wide variety of functions during cruise, Saturn approach, and the science mission.

During the Earth-to-Saturn cruise the CRSC provides all functions for delivering the combined spacecraft (probe + CRSC) to Saturn approach, and for maintaining the proper function of its own and the probe's systems, including environmental control, power, and data communications to and from the probe for periodic checkouts and post-launch entry sequence loads. Except for brief periods for activities such as TCMs, the solar-powered CRSC must point its solar arrays sunward, with relatively loose pointing requirements, unless it includes RTGs. Communications while in the inner solar system must accommodate uplink for commanding, navigation, and downlink of engineering data over a fairly wide range of Earth-spacecraft-sun angles. Cruise at heliocentric

distances greater than 5 AU places more emphasis on power generation and communications. Normal communications would use a 1.5 m HGA, whose X-band beam width of ~0.75° HWHM (Half-width half maximum) sets the spacecraft's pointing accuracy requirement of 0.25°.

Upon Saturn approach the CRSC delivers the probe to its entry trajectory at the proper attitude, and then diverts to a trajectory that will allow the CRSC to provide data relay support. Required accuracies for navigation, trajectory control, and release attitude control will be studied in the assessment phase following NF phase A selection, but will not strain current technologies. During the probe's descent the CRSC must continually point its HGA towards the entry/descent location to receive the probe's UHF data relay signal. At UHF frequencies the HGA beam width is wide, ~16° HWHM, so pointing requirements are fairly loose. Multiple copies of the entire data set must be stored in the CRSC before the data is downlinked to Earth, but those requirements are also easily met with a few hundred Mbit of storage capacity. After the data reception period is over, the CRSC must repoint the HGA to Earth, switch back to X-band, and downlink the data to ground stations. The CRSC must be capable of downlinking each copy of the data set (two channels) to Earth ground stations at least twice to ensure transfer of the entire set.

In all post-launch phases the CRSC handles all propulsive maneuvers. The post-release divert maneuver, and a deep space maneuver before the Earth flyby, are the mission's only deterministic maneuvers. The size of the divert maneuver depends upon its timing: the farther from Saturn, the lower the ΔV required. For example, at ~30 days before probe entry ΔV is ~50 m/s (80 m/s budgeted); 15 days out it is nearly 100 m/s. Conservative estimates of statistical ΔV budgets and margins indicate 315 m/s of ΔV capability is sufficient.

E.2.3 Ground System Requirements

The Saturn probe mission uses only standard ground system facilities and resources. The operations team will need standard office, computing, and communications facilities, and access to a mission control facility. Spacecraft commanding and engineering and science data downlink will use standard deep space communications facilities operating at X-band. High-activity periods will include launch, planetary gravity assist flybys, preparations for and execution of probe release and CRSC divert, and the science mission and subsequent data downlink.

E.3 Launch and Transfer Trajectory

One of the *Hera* mission's greatest challenges is sending the probe from Earth to Saturn. Hera's approach is to achieve this transfer as a mission of opportunity payload on another Saturn-bound mission, such as one of the multiple NASA NF missions being proposed for science in the Saturn system. NASA NF proposal teams are studying options for transfer trajectories and have identified multiple feasible trajectories and backups launching in 2024-2025 and arriving in 2033-2034. Proposal teams advancing to Step 2 of the NASA NF Program competition will conduct a wider search for Earth-to-Saturn trajectories. Two important parameters of these transfer trajectories are the *Vinf* of approach to Saturn, and the declination of the approach asymptote. The *Vinf* varies somewhat among the trajectories best suited for practical space flight missions to Saturn, but not so much that it significantly affects the probe entry speeds. The approach declination varies more among the trajectories, but previous studies show that for any approach declination typical of an Earth-to-Saturn transfer, there are choices of probe entry latitude and CRSC overflight trajectories that can achieve the *Hera* science objectives. Atmosphere-relative entry speeds could range from 26 km/s, near the theoretical minimum for a hyperbolic approach from an Earth-to-Saturn transfer, to nearly 30 km/s. A combination of approach declination and entry latitude is the primary determinant of where in that range a particular entry trajectory will be. Previous studies suggest that an entry flight path angle (EFPA) of -14° is well suited for a Saturn probe mission, but there is some flexibility to allow accommodating other aspects of the mission, should that be advantageous. Entries at steeper EFPAs would increase the atmosphere-relative entry speed somewhat, as discussed in Section E.1.3 above.

The last few months of the transfer trajectory are part of the Saturn approach phase of the mission. Several months before Saturn arrival the CRSC begins navigation and trajectory correction activities to ensure a proper approach trajectory and performs check-outs of the probe systems, in preparation for probe release approximately 30 days before entry, followed by the CRSC divert maneuver. Detailed schedules and performance requirements for these activities will be studied during the assessment phase.

E.4 Flight System

E.4.1 Entry Probe

The entry probe element consists of two major sub-elements: the DM that carries all the science instruments and support equipment; and the aeroshell that protects the DM during transfer cruise, post-release cruise, and atmospheric entry, keeping the inside it from pre-launch until the hypersonic deceleration phase is finished. There is also hardware mounted on the CRSC – the probe spin-release mechanism, as well the HGA UHF feed and the relay receivers. A 199-215 kg probe mass estimate is based on dimensional scaling laws applied to the *Galileo* probe and first-order adjustments for different instruments and use of the HEEET TPS materials discussed in Section E.1.3 above. **No adjustments have been made for the Saturn probe's more benign entry conditions, e.g. lower inertial load, so more detailed study during the assessment phase might realize further mass savings.**

E.4.1.1 Descent Module

The Descent Module has four primary functions:

- House, control, provide power to, and maintain the operating environment of all DM science instruments and subsystems;
- Collect, store (as needed), and transmit to the CRSC all science and engineering data;
- Control the descent rate profile of the DM to satisfy science objectives and operations requirements;
- Initiate the "wake up" sequence at the proper time before atmospheric entry.

The DM must survive the post-release coast and the atmospheric entry. Surviving coast is mostly a matter of electric power for small heaters, along with thermal insulation on the aeroshell exterior. The probe's primary battery complement is sized to include that function. Use of European RHUs would significantly decrease that battery size, but they are not used in this preliminary design due to low TRL. Surviving atmospheric entry involves robustness to large inertial loads of 10's to possibly 100 g's or more. The DM relies on the aeroshell for protection against the intense heating and huge thermal loads of entry.

All functions except descent rate control would use *Galileo* techniques. Once descending beneath the main parachute, the Galileo probe made no attempts to control descent rate. Like the *Huygens* probe, the Saturn probe cannot afford that simplicity because staying on the unmodified main parachute for the entire descent results in an excessively long descent duration making it impossible to reach 10 bars in the time available for the probe data link. During the assessment phase the DM's descent rate profile and several candidate approaches for controlling the DM's descent rate will be examined. The use of primary batteries for probe descent power is retained. Batteries are now available with specific energies that are significantly higher than Galileo and Huygens used, resulting in potential mass savings.

E.4.1.2 Aeroshell

An industrial Partner selected by ESA will provide the entire aeroshell. It consists of two main segments, a foreshell and a backshell, and has five primary functions:

- Provide an airframe that is aerodynamically stable at hypersonic and supersonic speeds in an H_2-He atmosphere, and is spin-stable along its symmetry axis;
- Protect the DM from the intense heating and huge thermal loads of entry;
- During hypersonic entry, accommodate the large inertial loads from the DM;
- Provide a stable transition from supersonic to subsonic flight;
- Upon completion of its entry functions, separate from the DM (by command from the DM).

Section E.1.3 above treats the entry aspects in detail and discusses probe size and mass. The preliminary studies used an estimated foreshell diameter of 1 m and a total mass of ~200 kg. The aeroshell's role in entry heating protection also gives it a role in post-release survival: its thermal insulating properties aid retention of heat in the DM. The shape of the aeroshell is important. The *Galileo* probe foreshell, a 45° sphere-cone, provides heritage for stability and ability to handle the thermal environment. The much lighter backshell of the aeroshell must provide protection from convective heating by hot gas from the foreshell, and from radiative heating from the trailing shock, where the atmospheric gas "blown open" by the probe's passage "slams shut" again. A partial-sphere shape is appropriate for the backshell, with the entry probe's center of mass at the center of the

sphere. With that alignment, odd pressure distributions on the backshell resulting from turbulence or atmospheric winds can cause translational movements but not the much more troublesome angular movements (i.e., rotation) that could destabilize the probe. Transition to subsonic flight overlaps with aeroshell deployment. Most entry aeroshell shapes are unstable during the transition from supersonic to subsonic flight and need stability enhancement. A drogue parachute will be deployed supersonically (at a Mach number slightly above 1.0) to provide trans-sonic stability, a technique the *Galileo* and *Huygens* probes used. After slowing to subsonic speeds the drogue parachute provides sufficient drag force to pull the backshell from the probe, and then to deploy the DM's main parachute. The ballistic coefficient of the probe and main parachute will be designed to be significantly less than the ballistic coefficient of the foreshell, thereby ensuring a safe separation of the probe from the foreshell.

E.4.2 Carrier-Relay Spacecraft

Spacecraft traveling to the outer solar system face three main design considerations: power generation, telecommunications (telecom), and thermal control. The Saturn Hera probe will be carried by a NASA spacecraft (likely a New Frontiers (NF) selection), so these designs issues and their impact on the Hera mission will be considered within the NASA-ESA mission framework. The NASA Carrier Relay Spacecraft (CRSC) flight system will provide a conservative proof-of-concept with sufficient margins to accommodate mission trade options that will minimize the impact on the primary NASA mission while providing the support necessary for the Hera mission to succeed. Many of these trades will be considered in the assessment phase and some will likely continue beyond the assessment as both the NASA and Hera missions evolve. The result of work to date is a system-level probe mission concept that should meet the NF4 2024-2025 launch date.

E.4.2.1 Mission Power

With operations at up to 9.5AU from the sun, power generation technology will be a main driving requirement for the NASA CRSC. Although this will be a decision by the NASA NF mission program, it is possible and perhaps likely that a solar power system supplemented by primary and secondary batteries will prove sufficient.

E.4.2.2 Telecommunications and Data Handling

For communications from the CRSC to Earth the CRSC-mounted telecommunications system is expected to utilize 1.5 meter X-band high gain antenna (HGA) to provide up to 5 kbps from 9.5 AU. At 5 kbps, the entire two-channel probe data set can be returned to Earth in one day or less, although multiple downlinks will be planned for redundancy. Hera probe-CRSC telecomm is expected to also use the CRSC HGA with a UHF feed (identical to Cassini receiving the Huygens probe signal) feeding a UHF receiver. As the Hera data volume is quite small, possibly several tens of Mbit or less for each channel (note that the Galileo probe data volume to 22 bars was less than 1 MB) the demands on the memory capactiy of the CRSC Command and Data Handling system capacity will be relatively small and it is expected that multiple copies of the probe data can easily be stored.

E.4.2.3 Pointing Modes and AOCS Design

It is likely that the NASA CRSC will remain sun-pointed throughout cruise except for brief periods for Trajectory Correction Maneuvers and for rotation to the probe release attitude. Beyond about 5.5 AU, the solar array output will not be sufficient to power continuous operation (although some power will be needed to maintain the CRSC and Hera within temperature limits), requiring the spacecraft to enter a sun-pointed slow spin hibernation similar to that of the *Rosetta* mission from 5.5 AU to Saturn approach.

At the proper time (to be established with NASA in the assessment phase) before commencement of the probe mission, the CRSC will perform navigation tasks to allow design and execution of needed TCMs. At the proper time the CRSC will turn to the attitude necessary for probe release, remaining in slow spin mode so as to impart the proper rotation on the probe. Upon release, the CRSC will turn to the attitude necessary for the divert maneuver, perform the maneuver, and then return to sun-pointed hibernation mode. Studies during the assessment phase will establish the optimum timing for this sequence.

For the data relay, the CRSC will be commanded awake, again perform a system health check, then rotate the HGA towards the predicted probe entry site for receiving the probe descent science data. During the probe descent as Saturn rotation carries the probe and the CRSC overflies to probe descent location, the CRSC will rotate to maintain HGA main beam pointing at the probe descent location. Following the receipt of the probe

signal and loss of telecomm lock, the CRSC will then return the solar panels to Sun-point. The probe science data, safely aboard the CRSC, will be downlinked at the earliest opportunity consistent within the NASA mission architecture.

E.4.2.4 Probe Delivery

Following probe release, the CRSC will be Doppler tracked from the Earth for a period of time to help characterize the probe release dynamics resulting in a reduced uncertainty in the knowledge of the probe entry ellipse. The time between probe release and CRSC rotation to Sun-point, and the time between probe release and arrival at the Saturn entry interface point will be investigated to optimize probe primary batteries mass and propellant mass required for the post-release divert maneuver. Since RHUs are not considered in this preliminary study, the batteries will need to provide power to keep the probe warm during the coast period. For shorter coasts, less power will be required, thereby allowing fewer probe batteries to be carried. However, for shorter coasts, higher ΔV will be required to perform the CRSC divert maneuver. For these preliminary studies we assume release 30 days before entry, but will be reconsidered as part of the NASA-ESA mission framework planning.

F. MANAGEMENT SCHEME

F.1 Management Overview

The *Hera* Saturn atmospheric entry probe mission is proposed as an ESA-led mission, with a significant and essential contribution by NASA. The proposal consortium is led by Dr. Olivier Mousis of France and Dr. David H. Atkinson of the USA. Dr. Mousis is Professor of Astrophysics at Aix-Marseille University and Member of the Institut Universitaire de France, and Dr. Atkinson is a Senior Scientist at Jet Propulsion Laboratory. Dr. Atkinson has participated in several Saturn probe mission concept studies including Kronos and several NASA Saturn probe concept studies including the current the JPL New Frontiers Saturn probe mission study. Participating in the Hera proposal consortium are two industrial companies, Airbus Defence and Space, France and SAFRAN Group, France. Additionally, five science teams will participate in the Phase A Study, each representing a potential science instruments for the *Hera* mission. The industrial partner participation is outlined in Subsection F.2 of the Management Section, and the Science Teams are outlined in Subsection F.4, Instrument Consortia.

If *Hera* is selected for flight following Phase A, then a joint ESA-NASA mission management will be established under the responsibilities of both agencies. ESA and NASA will follow their own approach for the industrial activities. At the appropriate time during the study phase, ESA will select its industrial contractor for the B1 study phase (or contractors if parallel competitive studies are being conducted) and in a second step the *Hera* development industrial contractor (Phase B/C/D/E/F).

F.2 International Collaboration

The international collaboration for the *Hera* mission will involve the atmospheric probe as well as the science instruments and science investigations. The Carrier Relay Spacecraft will be provided by NASA, likely as an element of the NASA New Frontiers 4 program. The spacecraft's design issues and their impact on the Hera mission will be considered within framework of the joint ESA-NASA mission management. The selected European industrial partner will be responsible for the probe configuration, and NASA Ames Research Center will carry responsibility for developing and providing to ESA the probe Thermal Protection System (TPS).

The *Hera* instrument payload will be provided by instrument PI teams from ESA's Members states and NASA scientific communities. Payload funding for ESA's members states will be provided by National funding agencie, while the U.S. payload contribution will be funded by NASA. The lead-funding agency for each PI-team will either be the PI National Funding Agency for a European PI-led team or NASA for a U.S.-led PI team. NASA funding decisions will not be made prior to selection for the Phase A study.

F.3 Procurement

ESA and selected industrial partners will lead the Phase A study for major probe systems procurement. The Hera entry probe Thermal Protection System will be supplied by the United States either by direct procurement by ESA or as a direct NASA contribution under a NASA-ESA Memorandum of Understanding. Additional services that may be supplied by NASA include trajectory planning and analysis (possibly from the Jet Propulsion Laboratory in Pasadena) and deep space tracking from NASA's Deep Space Network (DSN).

F.4 Instrument Consortia

Five science instruments will be studied in Phase A for cost and overall science benefit. Each of these instrument study teams will be an international collaboration. The different science instrument consortia are described below and summarized in Table F.1.

F.4.1 Atmospheric Structure Investigation (Probe)

The science team will be led by Francesca Ferri of CISAS,Università degli Studi di Padova (Italy), with contributions from Finland (Finnish Meteorological Institute - FMI, Helsinki), and France (LATMOS, LPC2E). The Co-Investigators and laboratories involved in the supply of the individual sensors of the ASI are listed in Table F.1.

F.4.2 Mass Spectrometer (Probe)

The science team will be led by Peter Wurz of Bern University (PI, Switzerland) and Jack Hunter Waite, SouthWest Research Institute (Co-PI, USA). The Hera Mass Spectrometer comprises the following elements

- Mass spectrometer, gas inlet and interface to sub-units, with all its electronics, system responsibility, integration will be provided by Peter Wurz, Bern University/Switzerland;
- The Cryotrap, getter traps, vacuum pumps, complete with valves, gauges, and associated electronics will be supplied by Jack Hunter Waite, Southwest Research Institute, SWRI (USA);
- The Gas calibration system (H/He), noble gases abundance and isotopes (TBC), other isotopes references (e.g. C and H) will be supplied by Andrew Morse and Simon Sheridan, Open University (UK).

F.4.3 Radio Science (Probe and Carrier)

The hardware for the Radio Science investigation consist of two Ultra-Stable Oscillators, one carried within the radio relay communication system on the Hera probe, and one in the relay receiver mountedon the carrier. The carrier relay receiver will be capable of measuring frequency and probe signal strength. These will be part of the communication system provided by the European industrial partner selected by ESA in Phase A. The radio science investigation will be led by David Atkinson at JPL (USA), assisted by Dr. Michael Bird (DE) and Dr. Thomas R. Spilker (USA). An additional European investigator may be added to the radio science team during Phase A.

F.4.4 Nephelometer (Probe)

The science team will be led by by Daphne Stam, of Delft Space Institute, Technical University Delft (Netherlands), with assistance by Jean-Baptiste Renard (Co-PI, France), Gwenael Berthet (France). The Hera Nephelometer system includes

- The Light Optical Aerosol Counter (LOAC) will be provided by Jean-Baptiste Renard, LPC2E-CNRS /Orléans University (France);
- The Polarimetric Aerosol Versatile Observatory (PAVO) optics will be provided by Christoph Keller, Leiden University (Netherlands) and Frans Snik (Netherlands);
- PAVO electronics and detector will be provided by Daphne Stam, Technical University Delft (Netherlands);
- Some opto-mechanical subsystems will be supplied by Olivier Mousis Mousis and David Le Mignant (France).

F.4.5 Net Flux Radiometer (Probe)

The Hera Net Flux Radiometer science team will be led by Michael Amato (PI), Shahid Aslam, Conor Nixon, Don Jennings and Tilak Hewagama, NASA Goddard Spaceflight Center (GSFC). Elements of the Hera Net Flux Radiometer system include

- The Net Flux Radiometer Instrument (detector, electronics, optics, thermal, mechanical) will be provided by Shahid Aslam, Michael Amato, and NASA GSFC engineering and instrument management groups;
- The Detector will be provided by Ernest Kessler of IPHT- Jena, Germany, and the rad-hard ROIC will be provided by NASA GSFC;
- The filters will be provided by Simon Calcutt of Oxford University, UK;
- Some opto-mechanical subsystems will be supplied by Olivier Mousis and David Le Mignant (France).

F.5 Data Policy

The main repository for an ESA-led Planetary mission is ESA's Planetary Science Archive (PSA). Science instrument data will be archived in a timely manner in ESA's PSA, and the data will be mirrored to NASA's Planetary Data System (PDS). The Hera mission team plans to share experiment data with the outer planet community through participation at symposia and workshops. Additionally, we will present papers and posters at relevant planetary science professional meetings and workshops, such as the European Geosciences Union (EGU), the American Geophysical Union (AGU), the European Planetary Science Congress (EPSC), the Lunar and Planetary Science Conference, NASA's Outer Planet Analysis Group (OPAG), and the American Astronomical Society Division for Planetary Sciences (DPS). A special effort will be made to collaborate with the Exoplanet community in achieving a broader context for the *Hera* probe findings, for example, with participation in the European Astrobiology Conference. Papers detailing research results will be submitted to professional journals.

F.6 Education and Public Outreach

The interest of the public in the Saturnian system continues to be significant, with much of the credit for the high interest in Saturn due to the

extraordinary success of the Cassini-Huygens mission. Images from the Saturnian system are regularly featured as the NASA "Astronomy Picture of the Day", and continue to attract the interest of the international media. The interest and excitement of students and the general public can only be amplified by a return to Saturn. The *Hera* mission will hold appeal for both students at all levels, and the general public. Education and Public Outreach activities will be an important part of the *Hera* mission planning. An EPO team will be created to develop programs and activities for the general public and students of all ages. Additionally, *Hera* results and interpretation of the science will be widely distributed to the public through internet sites, leaflets, public lectures, TV and radio programmes, CD and DVDs, museum and planetarium exhibitions, and in popular science magazines and in newspapers.

Table F.1 Work Breakdown Structure for *Hera* Science Instruments

Instrument			Lead	Support
1.0		**Probe Mass Spectrometer (MS)**	P. Wurz, PI (CH)	J. H. Waite, Co-PI (USA); A. Morse (UK)
	1.1	TOF-MS, MS Swiss element	P. Wurz (CH)	
	1.2	GSES, MS US element	J. H. Waite (USA)	
	1.3	RGS, MS UK element	A. Morse (UK)	S. Sheridan (UK)
2.0		**Probe Atmospheric Structure Investigation (ASI)**	F. Ferri, PI (IT)	S. Debei (UPD-CISAS, IT), A. Aboudan (IT), G. Colombatti (IT), C. Bettanini (IT)
	2.1	Accelerometers (ACC)	UPD-CISAS (IT)	
	2.2	Pressure sensors (PPI)	FMI (FI)	A-M. Harri (FMI, FI)
	2.3	Temperature Sensors (TEM)	UPD-CISAS (IT)	
	2.4	Atmospheric Electricity Package (AEP)	(FR)	A. Le Gall (LATMOS, FR), R. Modolo (LATMOS, FR), S. Célestin (LPC2E, FR)
	2.5	ASI Processor (DPU)	UPD-CISAS (IT)	
3.0		**Radio Science (Probe and Carrier)**	D. Atkinson, PI (USA)	T. Spilker (USA)
	3.1	Doppler Wind Experiment	D. Atkinson (USA)	M. Bird (DE)
	3.2	Atmospheric UHF Absorption/NH_3 abundance	D. Atkinson (USA)	T. Spilker (USA)
4.0		**Probe Net Flux Radiometer (NFR)**	M. Amato, PI (USA)	S. Aslam (USA); C. Nixon (USA)
	4.1	Instrument: optics, electronics, mechanical	S. Aslam (USA)	M. Amato, PI (USA)
	4.2	Detector (Germany) and rad hard ROIC (USA)	E. Kessler (DE)	M. Amato, PI (USA)
	4.3	Filters	S. Calcutt (UK)	
	4.4	Opto-mechanical subsystems	O. Mousis (FR)	D. Le Mignant (FR)
5.0		**Probe Nephelometer**	Daphne Stam, PI (NL)	J.-B. Renard, (FR)
	5.1	Light Optical Aerosol Counter (LOAC)	J.-B. Renard (FR)	
	5.2	PAVO Optics	C. Keller (NL)	F. Snik (NL)
	5.3	PAVO Detector & Elect.	D. Stam (NL)	
	5.4	Opto-mechanical subsystems	O. Mousis (FR)	D. Le Mignant (FR)

G. COSTING

Based on the mission elements defined in Sec. E, a preliminary cost study realized by Airbus Defence and Space indicates that the total budget of the Hera probe is about 293 million euros, excluding the Science payload and the TPS supplied by NASA. NASA ARC estimates that the total cost of the TPS construction is ~10 M€ (E. Venkatapathy, personal communication). Table G.1 summarizes the total cost for ESA, including the *Hera* probe descent module and the probe spin-release mechanism mounted on the NASA CRSC, the ground segment, the contingency and ESA project team costs. The hardware (HGA UHF feed, relay receivers, etc) mounted on the CRSC is not considered. The total estimated budget for a single Hera probe is significantly lower than the cost of the Huygens probe, estimated to be ~455 M€ by ESA in 2016 economic conditions [*133*].

Airbus Defence and Space estimates that the industrial cost corresponding to the manufacture of a second Saturn probe would be ~20% lower than a single one, i.e. ~148 million euros, implying that sending two ESA probes in Saturn's atmosphere would still match the M5 envelope. A multi-probe contribution from ESA could be of the highest interest for NASA in the case of the selection of a Uranus mission in the framework of the "Roadmaps to Ocean Worlds" (ROW) program. A Uranus orbiter could use the gravity assist of Saturn to fly toward Uranus. Given the similarities for the entry conditions in the two giants (T. Spilker, personal communication), two identical ESA Hera probes could be released in the atmospheres Saturn and Uranus.

Table G. 1 Costs for ESA (M€)

Launcher	0
Hera Probe + hardware mounted on the CRSC (Industrial cost)	185
Ground segment (MOC + SOC)	20 + 10
Contingency	41
ESA project team	37
Total ESA	**293**

REFERENCES

[1] Gomes, R., Levison, H. F., Tsiganis, K., Morbidelli, A. 2005. Origin of the cataclysmic Late Heavy Bombardment period of the terrestrial planets. Nature 435, 466-469.

[2] Chambers, J. E., Wetherill, G. W. 2001. Planets in the asteroid belt. Meteoritics and Planetary Science 36, 381-399.

[3] Owen, T., Mahaffy, P., Niemann, H. B., Atreya, S., Donahue, T., Bar-Nun, A., de Pater, I. 1999. A low-temperature origin for the planetesimals that formed Jupiter. Nature 402, 269-270.

[4] von Zahn, U., Hunten, D. M., Lehmacher, G. 1998. Helium in Jupiter's atmosphere: Results from the Galileo probe helium interferometer experiment. Journal of Geophysical Research 103, 22815-22830.

[5] Orton, G. S., and 16 colleagues 1998. Characteristics of the Galileo probe entry site from Earth-based remote sensing observations. Journal of Geophysical Research 103, 22791-22814.

[6] Wong, M. H., Mahaffy, P. R., Atreya, S. K., Niemann, H. B., Owen, T. C. 2004. Updated Galileo probe mass spectrometer measurements of carbon, oxygen, nitrogen, and sulfur on Jupiter. Icarus 171, 153-170.

[7] Banfield, D., Gierasch, P. J., Conrath, B. J., Achterberg, R. K., Nicholson, P. D., Hedman, M. M. 2014. Saturn's Helium Abundance from Cassini VIMS Stellar Occultations and CIRS Limb Temperature Profiles. AAS/Division for Planetary Sciences Meeting Abstracts 46, #512.01.

[8] Pollack, J. B., Hubickyj, O., Bodenheimer, P., Lissauer, J. J., Podolak, M., Greenzweig, Y. 1996. Formation of the Giant Planets by Concurrent Accretion of Solids and Gas. Icarus 124, 62-85.

[9] Alibert, Y., Mousis, O., Benz, W. 2005. On the Volatile Enrichments and Composition of Jupiter. The Astrophysical Journal 622, L145-L148.

[10] Alibert, Y., Mousis, O., Mordasini, C., Benz, W. 2005. New Jupiter and Saturn Formation Models Meet Observations. The Astrophysical Journal 626, L57-L60.

[11] Dodson-Robinson, S. E., Bodenheimer, P. 2010. The formation of Uranus and Neptune in solid-rich feeding zones: Connecting chemistry and dynamics. Icarus 207, 491-498.

[12] Helled, R., Bodenheimer, P. 2014. The Formation of Uranus and Neptune: Challenges and Implications for Intermediate-mass Exoplanets. The Astrophysical Journal 789, 69.

[13] Mizuno, H. 1980. Formation of the Giant Planets. Progress of Theoretical Physics 64, 544-557.

[14] Lin, D. N. C., Papaloizou, J. 1986. On the tidal interaction between protoplanets and the protoplanetary disk. III - Orbital migration of protoplanets. The Astrophysical Journal 309, 846-857.

[15] Ward, W. R. 1997. Protoplanet Migration by Nebula Tides. Icarus 126, 261-281.

[16] Ida, S., Lin, D. N. C. 2004. Toward a Deterministic Model of Planetary Formation. I. A Desert in the Mass and Semimajor Axis Distributions of Extrasolar Planets. The Astrophysical Journal 604, 388-413.

[17] Mordasini, C., Alibert, Y., Klahr, H., Henning, T. 2012. Characterization of exoplanets from their formation. I. Models of combined planet formation and evolution. Astronomy and Astrophysics 547, A111.

[18] Boss, A. P. 1997. Giant planet formation by gravitational instability. Science 276, 1836-1839.

[19] Boss, A. P. 2001. Formation of Planetary-Mass Objects by Protostellar Collapse and Fragmentation. The Astrophysical Journal 551, L167-L170.

[20] Saumon, D., Guillot, T. 2004. Shock Compression of Deuterium and the Interiors of Jupiter and Saturn. The Astrophysical Journal 609, 1170-1180.

[21] Helled, R., Guillot, T. 2013. Interior Models of Saturn: Including the Uncertainties in Shape and Rotation. The Astrophysical Journal 767, 113.

[22] Wilson, H., Militzer, B. 2011. Solubility and erosion of icy cores in giant planets. APS Meeting Abstracts 31010.

[23] Wilson, H. F., Militzer, B. 2012. Rocky Core Solubility in Jupiter and Giant Exoplanets. Physical Review Letters 108, 111101.

[24] Leconte, J., Chabrier, G. 2012. A new vision of giant planet interiors: Impact of double diffusive convection. Astronomy and Astrophysics 540, A20.

[25] Leconte, J., Chabrier, G. 2013. Layered convection as the origin of Saturn's luminosity anomaly. Nature Geoscience 6, 347-350.

[26] Atreya, S. K., Mahaffy, P. R., Niemann, H. B., Wong, M. H., Owen, T. C. 2003. Composition and origin of the atmosphere of Jupiter - an update, and implications for the extrasolar giant planets. Planetary and Space Science 51, 105-112.

[27] Teanby, N. A., Fletcher, L. N., Irwin, P. G. J., Fouchet, T., Orton, G. S. 2006. New upper limits for hydrogen halides on Saturn derived from Cassini-CIRS data. Icarus 185, 466-475.

[28] Fletcher, L. N., and 17 colleagues 2012. Sub-millimetre spectroscopy of Saturn's trace gases from Herschel/SPIRE. Astronomy and Astrophysics 539, A44.

[29] Mahaffy, P. R., Niemann, H. B., Alpert, A., Atreya, S. K., Demick, J., Donahue, T. M., Harpold, D. N., Owen, T. C. 2000. Noble gas abundance and isotope ratios in the atmosphere of Jupiter from the Galileo Probe Mass Spectrometer. Journal of Geophysical Research 105, 15061-15072.

[30] Wong, M. H., Mahaffy, P. R., Atreya, S. K., Niemann, H. B., Owen, T. C. 2004. Updated Galileo probe mass spectrometer measurements of carbon, oxygen, nitrogen, and sulfur on Jupiter. Icarus 171, 153-170.

[31] Stevenson, D. J., Lunine, J. I. 1988. Rapid formation of Jupiter by diffuse redistribution of water vapor in the solar nebula. Icarus 75, 146-155.

[32] Gautier, D., Hersant, F., Mousis, O., Lunine, J. I. 2001. Enrichments in Volatiles in Jupiter: A New Interpretation of the Galileo Measurements. The Astrophysical Journal 550, L227-L230.

[33] Hersant, F., Gautier, D., Lunine, J. I. 2004. Enrichment in volatiles in the giant planets of the Solar System. Planetary and Space Science 52, 623-641.

[34] Mousis, O., Marboeuf, U., Lunine, J. I., Alibert, Y., Fletcher, L. N., Orton, G. S., Pauzat, F., Ellinger, Y. 2009. Determination of the Minimum Masses of Heavy Elements in the Envelopes of Jupiter and Saturn. The Astrophysical Journal 696, 1348-1354.

[35] Mousis, O., Lunine, J. I., Madhusudhan, N., Johnson, T. V. 2012. Nebular Water Depletion as the Cause of Jupiter's Low Oxygen Abundance. The Astrophysical Journal 751, L7.

[36] Fletcher, L. N., Orton, G. S., Teanby, N. A., Irwin, P. G. J. 2009. Phosphine on Jupiter and Saturn from Cassini/CIRS. Icarus 202, 543-564.

[37] Noll, K. S., Knacke, R. F., Geballe, T. R., Tokunaga, A. T. 1988. Evidence for Germane in Saturn. Icarus, 75, 409-422.

[38] Noll, K. S., Knacke, R. F., Geballe, T. R., Tokunaga, A. T. 1986. Detection of carbon monoxide in Saturn. ApJL, 309, L91-L94.

[39] Noll, K. S., Geballe, T. R., Knacke, R. F. 1989. Arsine in Saturn and Jupiter. ApJ 338, L71-L74.

[40] Bézard, B., Drossart, P., Lellouch, E., Tarrago, G., Maillard, J. P. 1989. Detection of arsine in Saturn. ApJ 346, 509-513.

[41] Fletcher, L. N., Orton, G. S., Teanby, N. A., Irwin, P. G. J., Bjoraker, G. L. 2009. Methane and its isotopologues on Saturn from Cassini/CIRS observations. Icarus 199, 351-367.

[42] Fletcher, L. N., Baines, K. H., Momary, T. W., Showman, A. P., Irwin, P. G. J., Orton, G. S., Roos-Serote, M., Merlet, C. 2011. Saturn's tropospheric composition and clouds from Cassini/VIMS 4.6-5.1 mm nightside spectroscopy. Icarus 214, 510-533.

[43] de Graauw, T., and 18 colleagues 1997. First results of ISO-SWS observations of Saturn: detection of CO2, CH3C2H, C4H2 and tropospheric H2O. Astronomy and Astrophysics 321, L13-L16.

[44] Briggs, F. H., Sackett, P. D. 1989. Radio observations of Saturn as a probe of its atmosphere and cloud structure. Icarus 80, 77-103.

[45] Conrath, B. J., Gautier, D. 2000. Saturn Helium Abundance: A Reanalysis of Voyager Measurements. Icarus 144, 124-134.

[46] Lodders, K., Palme, H., Gail, H.-P. 2009. Abundances of the Elements in the Solar System. Landolt Börnstein 44.

[47] Fortney, J. J., Hubbard, W. B. 2003. Phase separation in giant planets: inhomogeneous evolution of Saturn. Icarus 164, 228-243.

[48] Wilson, H. F., Militzer, B. 2010. Sequestration of Noble Gases in Giant Planet Interiors. Physical Review Letters 104, 121101.

[49] Niemann, H. B., and 12 colleagues 1996. The Galileo Probe Mass Spectrometer: Composition of Jupiter's Atmosphere. Science 272, 846-849.

[50] Niemann, H. B., and 11 colleagues 1998. The composition of the Jovian atmosphere as determined by the Galileo probe mass spectrometer. Journal of Geophysical Research 103, 22831-22846.

[51] Lellouch, E., Bézard, B., Fouchet, T., Feuchtgruber, H., Encrenaz, T., de Graauw, T. 2001. The deuterium abundance in Jupiter and Saturn from ISO-SWS observations. Astronomy and Astrophysics 370, 610-622.

[52] Bézard, B., Greathouse, T., Lacy, J., Richter, M., Griffith, C. A. 2003. The D/H ratio in Jupiter and Saturn from High-resolution Spectral Observations near 8.6 mm. Bulletin of the American Astronomical Society 35, 1017.

[53] Guillot, T. 1999. A comparison of the interiors of Jupiter and Saturn. Planetary and Space Science 47, 1183-1200.

[54] Marty, B., Chaussidon, M., Wiens, R. C., Jurewicz, A. J. G., Burnett, D. S. 2011. A ^{15}N-Poor Isotopic Composition for the Solar System As Shown by Genesis Solar Wind Samples. Science 332, 1533.

[55] Fouchet, T., Lellouch, E., Bézard, B., Encrenaz, T., Drossart, P., Feuchtgruber, H., de Graauw, T. 2000. ISO-SWS Observations of Jupiter: Measurement of the Ammonia Tropospheric Profile and of the ^{15}N/^{14}N Isotopic Ratio. Icarus 143, 223-243.

[56] Fouchet, T., Irwin, P. G. J., Parrish, P., Calcutt, S. B., Taylor, F. W., Nixon, C. A., Owen, T. 2004. Search for spatial variation in the Jovian ^{15}N/^{14}N ratio from Cassini/CIRS observations. Icarus 172, 50-58.

[57] McKeegan,, Kevin D., and 46 colleagues 2006. Isotopic Compositions of Cometary Matter Returned by Stardust. Science 314, 1724.

[58] Niemann, H. B., Atreya, S. K., Demick, J. E., Gautier, D., Haberman, J. A., Harpold, D. N., Kasprzak, W. T., Lunine, J. I., Owen, T. C., Raulin, F. 2010. Composition of Titan's lower atmosphere and simple surface volatiles as measured by the Cassini-Huygens probe gas chromatograph mass spectrometer experiment. Journal of Geophysical Research (Planets) 115, 12006.

[59] Mandt, K. E., Waite, J. H., Lewis, W., Magee, B., Bell, J., Lunine, J., Mousis, O., Cordier, D. 2009. Isotopic evolution of the major constituents of Titan's atmosphere based on Cassini data. Planetary and Space Science 57, 1917-1930.

[60] Fletcher, L. N., Greathouse, T. K., Orton, G. S., Irwin, P. G. J., Mousis, O., Sinclair, J. A., Giles, R. S. 2014. The origin of nitrogen on Jupiter and Saturn from the 15N/14N ratio. Icarus 238, 170-190.

[61] Rousselot, P., and 11 colleagues 2014. Toward a Unique Nitrogen Isotopic Ratio in Cometary Ices. The Astrophysical Journal 780, L17.

[62] Asplund, M., Grevesse, N., Sauval, A. J., Scott, P. 2009. The Chemical Composition of the Sun. Annual Review of Astronomy and Astrophysics 47, 481-522.

[63] Noll, K. S., Geballe, T. R., Knacke, R. F. 1995. Detection of $H_2{}^{18}O$ in Jupiter. The Astrophysical Journal 453, L49.

[64] Marty, B., and 56 colleagues 2009. Kronos: exploring the depths of Saturn with probes and remote sensing through an international mission. Experimental Astronomy 23, 947-976.

[65] Gautier, D., Hersant, F. 2005. Formation and Composition of Planetesimals. Space Science Reviews 116, 25-52.

[66] Mousis, O., Alibert, Y., Benz, W. 2006. Saturn's internal structure and carbon enrichment. Astronomy and Astrophysics 449, 411-415.

[67] Guillot, T., Hueso, R. 2006. The composition of Jupiter: sign of a (relatively) late formation in a chemically evolved protosolar disc. Monthly Notices of the Royal Astronomical Society 367, L47-L51.

[68] Mousis, O., Lunine, J. I., Fletcher, L. N., Mandt, K. E., Ali-Dib, M., Gautier, D., Atreya, S. 2014. New insights on Saturn's formation from its nitrogen isotopic composition. The Astrophysical Journal Letters 796, L28.

[69] West, R. A., Baines, K. H., Karkoschka, E., Sànchez-Lavega, A. 2009. Clouds and Aerosols in Saturn's Atmosphere. Saturn from Cassini-Huygens 161.

[70] Fouchet, T., Moses, J. I., Conrath, B. J. 2009. Saturn: Composition and Chemistry. Saturn from Cassini-Huygens 83.

[71] Del Genio, A. D., Achterberg, R. K., Baines, K. H., Flasar, F. M., Read, P. L., Sànchez-Lavega, A., Showman, A. P. 2009. Saturn Atmospheric Structure and Dynamics. Saturn from Cassini-Huygens 113.

[72] Nagy, A. F., Kliore, A. J., Mendillo, M., Miller, S., Moore, L., Moses, J. I., Müller-Wodarg, I., Shemansky, D. 2009. Upper Atmosphere and Ionosphere of Saturn. Saturn from Cassini-Huygens 181.

[73] Atkinson, D. H., Pollack, J. B., Seiff, A. 1998. The Galileo probe Doppler wind experiment:

Measurement of the deep zonal winds on Jupiter. Journal of Geophysical Research 103, 22911-22928.

[74] Seiff, A., Kirk, D. B., Knight, T. C. D., Young, R. E., Mihalov, J. D., Young, L. A., Milos, F. S., Schubert, G., Blanchard, R. C., Atkinson, D. 1998. Thermal structure of Jupiter's atmosphere near the edge of a 5-mm hot spot in the north equatorial belt. Journal of Geophysical Research 103, 22857-22890.

[75] Magalhaes, J. A., Seiff, A., Young, R. E. 2002. The Stratification of Jupiter's Troposphere at the Galileo Probe Entry Site. Icarus 158, 410-433.

[76] Yelle, R. V., Miller, S. 2004. Jupiter's thermosphere and ionosphere. Jupiter. The Planet, Satellites and Magnetosphere 185-218.

[77] Baldwin, M. P., and 14 colleagues 2001. The quasi-biennial oscillation. Reviews of Geophysics 39, 179-229.

[78] Fouchet, T., Guerlet, S., Strobel, D. F., Simon-Miller, A. A., Bézard, B., Flasar, F. M. 2008. An equatorial oscillation in Saturn's middle atmosphere. Nature 453, 200-202.

[79] Hickey, M. P., Walterscheid, R. L., Schubert, G. 2000. Gravity Wave Heating and Cooling in Jupiter's Thermosphere. Icarus 148, 266-281.

[80] Watkins, C., Cho, J. Y.-K. 2013. The vertical structure of Jupiter's equatorial zonal wind above the cloud deck, derived using mesoscale gravity waves. Geophysical Research Letters 40, 472-476.

[81] Sánchez-Lavega, A., and 24 colleagues 2008. Depth of a strong Jovian jet from a planetary-scale disturbance driven by storms. Nature 451, 437-440.

[82] Marley, M. S., Ackerman, A. S., Cuzzi, J. N., Kitzmann, D. 2013. Clouds and Hazes in Exoplanet Atmospheres. Comparative Climatology of Terrestrial Planets 367-391.

[83] Weidenschilling, S. J., Lewis, J. S. 1973. Atmospheric and cloud structures of the Jovian planets. Icarus 20, 465-476.

[84] Atreya, S. K., Wong, M. H., Owen, T. C., Mahaffy, P. R., Niemann, H. B., de Pater, I., Drossart, P., Encrenaz, T. 1999. A comparison of the atmospheres of Jupiter and Saturn: deep atmospheric composition, cloud structure, vertical mixing, and origin. Planetary and Space Science 47, 1243-1262.

[85] West, R. A., Baines, K. H., Friedson, A. J., Banfield, D., Ragent, B., Taylor, F. W. 2004. Jovian clouds and haze. Jupiter. The Planet, Satellites and Magnetosphere.

[86] Baines, K. H., Carlson, R. W., Kamp, L. W. 2002. Fresh Ammonia Ice Clouds in Jupiter. I. Spectroscopic Identification, Spatial Distribution, and Dynamical Implications. Icarus 159, 74-94.

[87] Sromovsky, L. A., Baines, K. H., Fry, P. M. 2013. Saturn's Great Storm of 2010-2011: Evidence for ammonia and water ices from analysis of VIMS spectra. Icarus 226, 402-418.

[88] Sromovsky, L. A., Collard, A. D., Fry, P. M., Orton, G. S., Lemmon, M. T., Tomasko, M. G., Freedman, R. S. 1998. Galileo probe measurements of thermal and solar radiation fluxes in the Jovian atmosphere. Journal of Geophysical Research 103, 2929.

[89] Dyudina, U. A., Ingersoll, A. P., Ewald, S. P., Porco, C. C., Fischer, G., Kurth, W. S., West, R. A. 2010. Detection of visible lightning on Saturn. Geophysical Research Letters 37, 9205.

[90] Yair, Y., Fischer, G., Simoes, F., Renno, N., Zarka, P. 2008. Updated Review of Planetary Atmospheric Electricity. Space Science Reviews 137, 29-49.

[91] Rinnert, K., Lanzerotti, L. J., Uman, M. A., Dehmel, G., Gliem, F. O., Krider, E. P., Bach, J. 1998. Measurements of radio frequency signals from lightning in Jupiter's atmosphere. Journal of Geophysical Research 103, 22979-22992.

[92] Fischer, G., Gurnett, D. A., Kurth, W. S., Akalin, F., Zarka, P., Dyudina, U. A., Farrell, W. M., Kaiser, M. L. 2008. Atmospheric Electricity at Saturn. Space Science Reviews 137, 271-285.

[93] Moses, J. I., Fouchet, T., Bézard, B., Gladstone, G. R., Lellouch, E., Feuchtgruber, H. 2005. Photochemistry and diffusion in Jupiter's stratosphere: Constraints from ISO observations and comparisons with other giant planets. Journal of Geophysical Research (Planets) 110, 8001.

[94] Wong, M. H. 2009. Comment on « Transport of nonmethane hydrocarbons to Jupiter's troposphere by descent of smog particles » by Donald M. Hunten [Icarus 194 (2008) 616 622].Icarus 199, 231-235.

[95] Sánchez-Lavega, A., Colas, F., Lecacheux, J., Laques, P., Parker, D., Miyazaki, I. 1991. The Great White SPOT and disturbances in Saturn's equatorial atmosphere during 1990. Nature 353, 397-401.

[96] García-Melendo, E., Pérez-Hoyos, S., Sánchez-Lavega, A., Hueso, R. 2011. Saturn's zonal

wind profile in 2004-2009 from Cassini ISS images and its long-term variability. Icarus 215, 62-74.

[97] Read, P. L., Conrath, B. J., Fletcher, L. N., Gierasch, P. J., Simon-Miller, A. A., Zuchowski, L. C. 2009. Mapping potential vorticity dynamics on saturn: Zonal mean circulation from Cassini and Voyager data. Planetary and Space Science 57, 1682-1698.

[98] P. Wurz, D. Abplanalp, M. Tulej, and H. Lammer. A. 2012. Neutral Gas Mass Spectrometer for the Investigation of Lunar Volatiles. Planet. Sp. Science, 74, 264-269.

[99] Durry, G., *et al.* 2002. In situ measurement of H_2O and CH_4 with telecommunication laser diodes in the lower stratosphere: dehydration and indication of a tropical air intrusion at mid-latitudes, J. Atmos. Chem. 43(3), 175–194.

[100] Webster, C.R. and P.R. Mahaffy. 2011. Determining the local abundance of Martian methane and its $^{13}C/^{12}C$ and D/H isotopic ratios for comparison with related gas and soil analysis on the 2011 Mars Science Laboratory (MSL) mission, Planet. Space Sci., 59, 271–283.

[101] Mahaffy, P.R., *et al.* 2012. The sample analysis at Mars investigation and instrument suite, Space Sci. Rev., 170, 401–478.

[102] Niemann, H.B., *et al.* 2002 The gas chromatograph mass spectrometer for the Huygens probe, Space Sci. Rev., 104, 551–590.

[103] Balsiger, H. *et al*. 2007. ROSINA - Rosetta Orbiter Spectrometer for Ion and Neutral Analysis, Space Science Review, 128, 745-801.

[104] Fulchignoni, M., *et al.* 2005. In situ measurements of the physical characteristics of Titan's atmosphere and surface Nature, 438, 785-791.

[105] Fulchignoni, M., *et al.* 2002. The characterisation of Titan's atmospheric physical properties by the Huygens Atmospheric Structure Instrument (HASI), Space Science Reviews, 104, 395-431.

[106] Seiff, A. and T.C.D. Knight. 1992. The Galileo probe Atmosphere Structure Instrument, Space Sci.Rev.,60, 203-232.

[107] Seiff, A., *et al.* 1980 Measurements of thermal structure and thermal contrasts in the atmosphere of Venus and related dynamical observations: Results from the four Pioneer Venus Probes, J. Geophys. Res., 85(A13), 7903-7933.

[108] Zarnecki, J.C., *et al.* 2004. In-Flight Performance of the HASI Accelerometer and Implications for Results at Titan. Proceedings of Planetary Probe Atmospheric Entry and Descent Trajectory Analysis and Science, October 6-9, 2003 Lisbon, Portugal, ESA-SP-544.

[109] Milos, F.S. 1997. Galileo probe heat shield ablation experiment Journal of Spacecraft and Rockets, 34, 705-713.

[110] R. Grard, H. Svedhem, V. Brown, P. Falkner, and M. Hamelin. 1995. An experimental investigation of atmospheric electricity and lightning activity to be performed during the descent of the Huygens Probe onto Titan. Journal of Atmospheric and Terrestrial Physics, vol. 57, pp. 575-585.

[111] Boese, R. W., *et al*. 1980. The Infrared Radiometer on the Sounder Probe of the Pioneer Venus Mission, IEEE transactions on Geoscience and Remote Sensing, vol. GE-18, no. 1.

[112] Sromovsky, L.A. 1998. Galileo probe measurements of thermal and solar radiation fluxes in the Jovian atmosphere, Journal of Geophysical Research, vol. 103, no. E10, pp. 22929-22977.

[113] Quilligan, G., *et al.*, 2014. A 0.18μm CMOS Thermopile Readout ASIC Immune to 50 Mrad Total Ionizing Dose (Si) and Single Event Latchup to 174 MeV-cm2/mg, International Workshop on Instrumentation for Planetary Missions (IPM-2014), Greenbelt, MD.

[114] Hansen, J. E., and L.D. Travis. 1974. Light scattering in planetary atmospheres, Space Sci. Rev., 16, 527 – 610.

[115] Snik, F., Th. Karalidi, and C.U. Keller. 2009. Spectral modulation for full linear polarimetry, Appl. Optics, 48, 1337-1346.

[116] Rietjens, J. H. H., G. van Harten, D. Bekkers, *et al.* 2014. Performance of spectrally modulated polarimetry II: Data reduction and absolute polarization calibration of a prototype SPEX satellite instrument, submitted to Appl. Optics.

[117] Renard, J.-B. *et al.* 2014. LOAC: a small aerosol optical counter/sizer for ground-based and balloon measurements of the size distribution and nature of atmospheric particles 2016. Atmos. Meas. Tech., 9, 1721-1742.

[118] Lurton, T., *et al.* 2014. Light scattering at small angles by atmospheric irregular particles: modelling and laboratory measurements, Atmos.

Meas. Tech., 7, 931–939.

[119] Ragent, B., *et al.* 1992. Galileo Probe Nephelometer Experiment, Space Sci. Rev. 60, 179-201.

[120] Atkinson, D.H., J.B. Pollack, and A. Seiff. 1996. Galileo Doppler Measurements of the Deep Zonal Winds at Jupiter, Science 272, 842.

[121] Atkinson, D.H., A. Seiff, and A.P. Ingersoll. 1997. Deep Winds on Jupiter as Measured by the Galileo Probe, Nature, 388, 649-650.

[122] Bird, M.K., *et al.*, 2005. The vertical profile of winds on Titan, Nature 438, 800-802.

[123] Folkner, W.M., *et al*., 1997. Estimation Earth-Based Radio Tracking of the Galileo Probe for Jupiter Wind. Science 275, 644.

[124] Folkner, W.M., *et al*. 2006. Winds on Titan from ground-based tracking of the Huygens probe, J. Geophys. Res., 111.

[125] Folkner, W.M., R. Woo, and S. Nandi. 1998. Ammonia abundance in Jupiter's atmosphere derived from the attenuation of the Galileo probe's radio signal, J. Geophys. Res. 103, El0, 22,847-22,855.

[126] Atkinson, D.H. 1989. Measurement of planetary wind fields by Doppler monitoring of an atmospheric entry vehicle, Ph.D. Thesis, Washington State University, Pullman WA.

[127] Bird, M.K., *et al.* 1997. The Huygens Doppler Wind Experiment, European Space Agency Journal, SP-1177, 139-162, Paris.

[128] Asmar, S.W., D.H. Atkinson, M.K., Bird, and G.E. Wood. 2003. Ultra-Stable Oscillators for Planetary Entry Probes, International Workshop Planetary Probe Atmospheric Entry and Descent Trajectory Analysis and Science, Lisbon, Portugal.

[129] Asmar, S.W., D.H. Atkinson, G. Weaver, and N. Yu. 2010. Science-Quality Oscillators for Deep Space Probes, 7th International Planetary Probe Workshop, Barcelona, Spain.

[130] Lacoste, M., Barreteau, R., and Broquere, B. 2006. Sustainable C-Phenolic ablative material for the Ariane 5 SR application to TPS for entry probes, ESA SP-631. European Space Agency, Published on CDROM, id.27.1

[131] Barreteau, R., Gerona, E., and Pichon, T. 2016. Characterization of TPS materials of high density for high heat flux (CT3H). 8th European Workshop on Thermal Protection Systems and Hot Structures, ESTEC, Netherlands 19th – 22th April 2016

[132] Atkinson, D.H, *et al.* 2006. Direct-To-Earth Communications for Outer Planetary Entry Probe Missions. Proceedings of the Fourth International Planetary Probe Workshop, Pasadena, California, 27 – 30 June 2006.

[133] Status of the long-term planning of the Science Programme. ESA/SPC(2016)14 Paris, 15 June 2016.